EXPERT PLUS

FREE STANDING H820

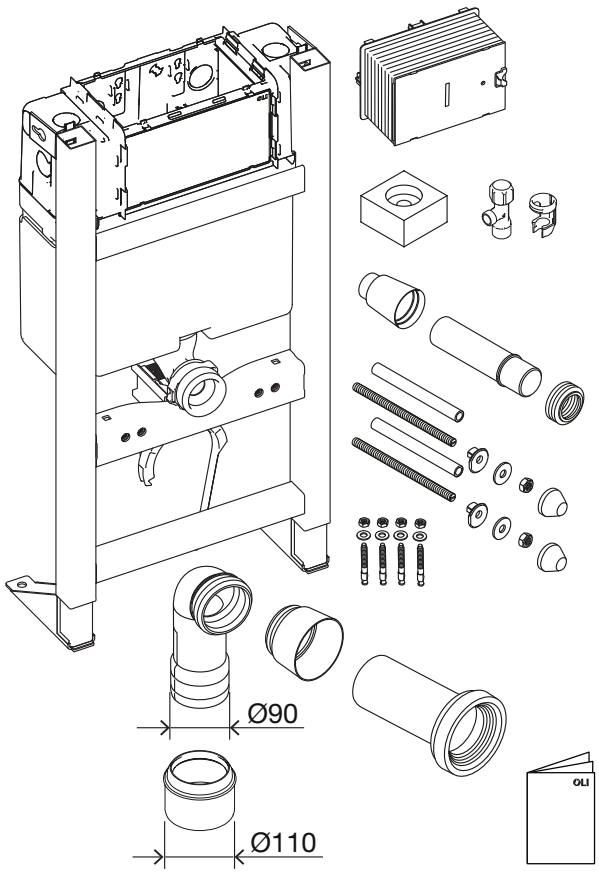

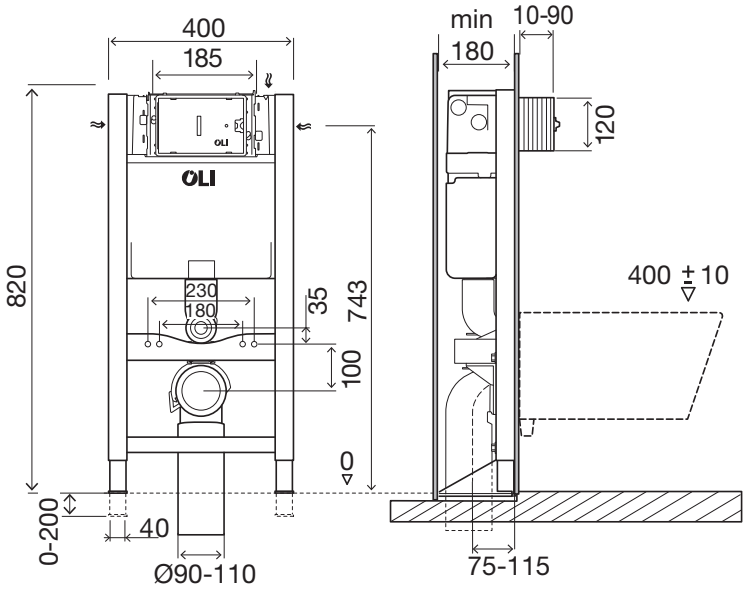

(dimensions in millimeters)

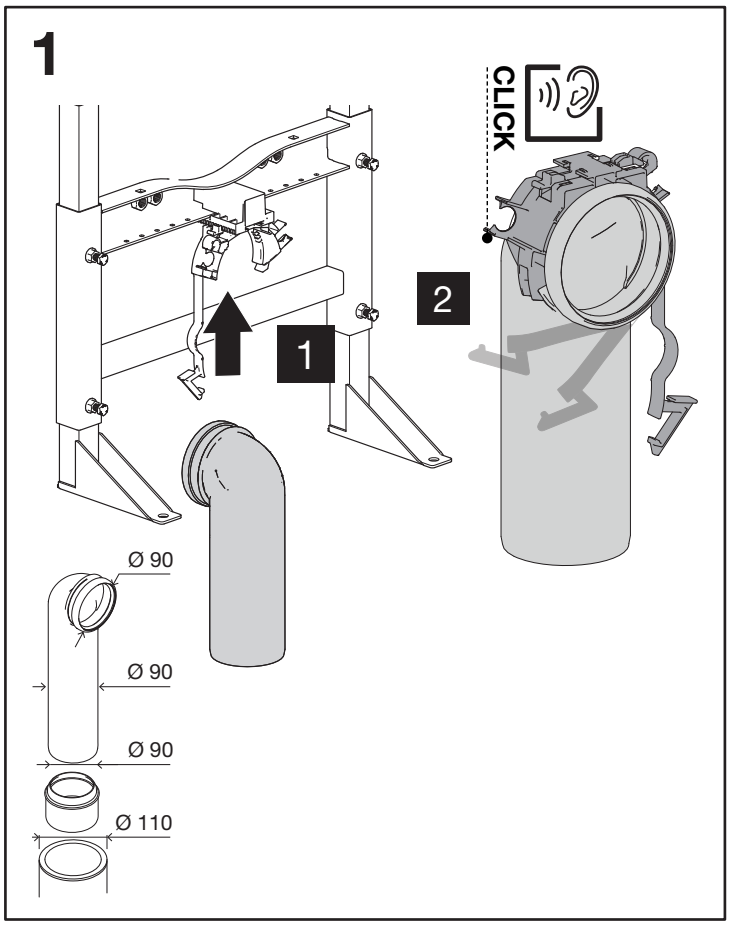

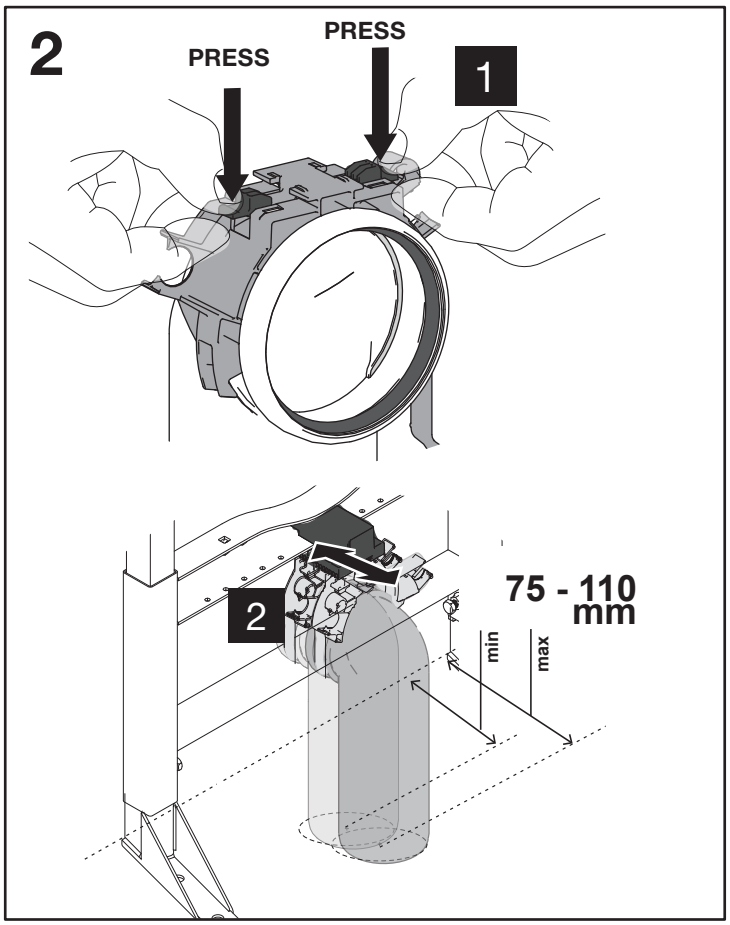

www.oli-world.com

comercial@oli-world.com | info@olisrl.it

AC10000186265.4

3

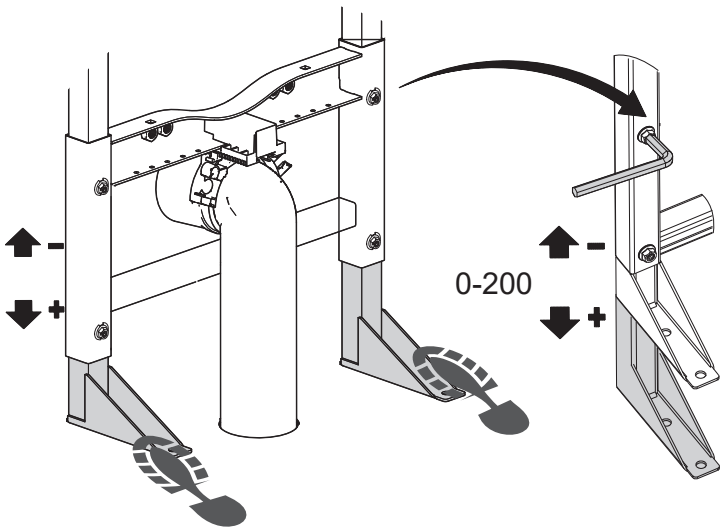
0-200

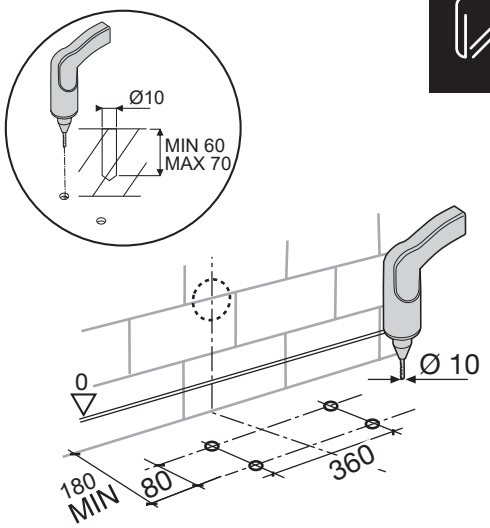
Ø10
MIN 60
MAX 70
0
Ø 10
180
MIN
80
360

4

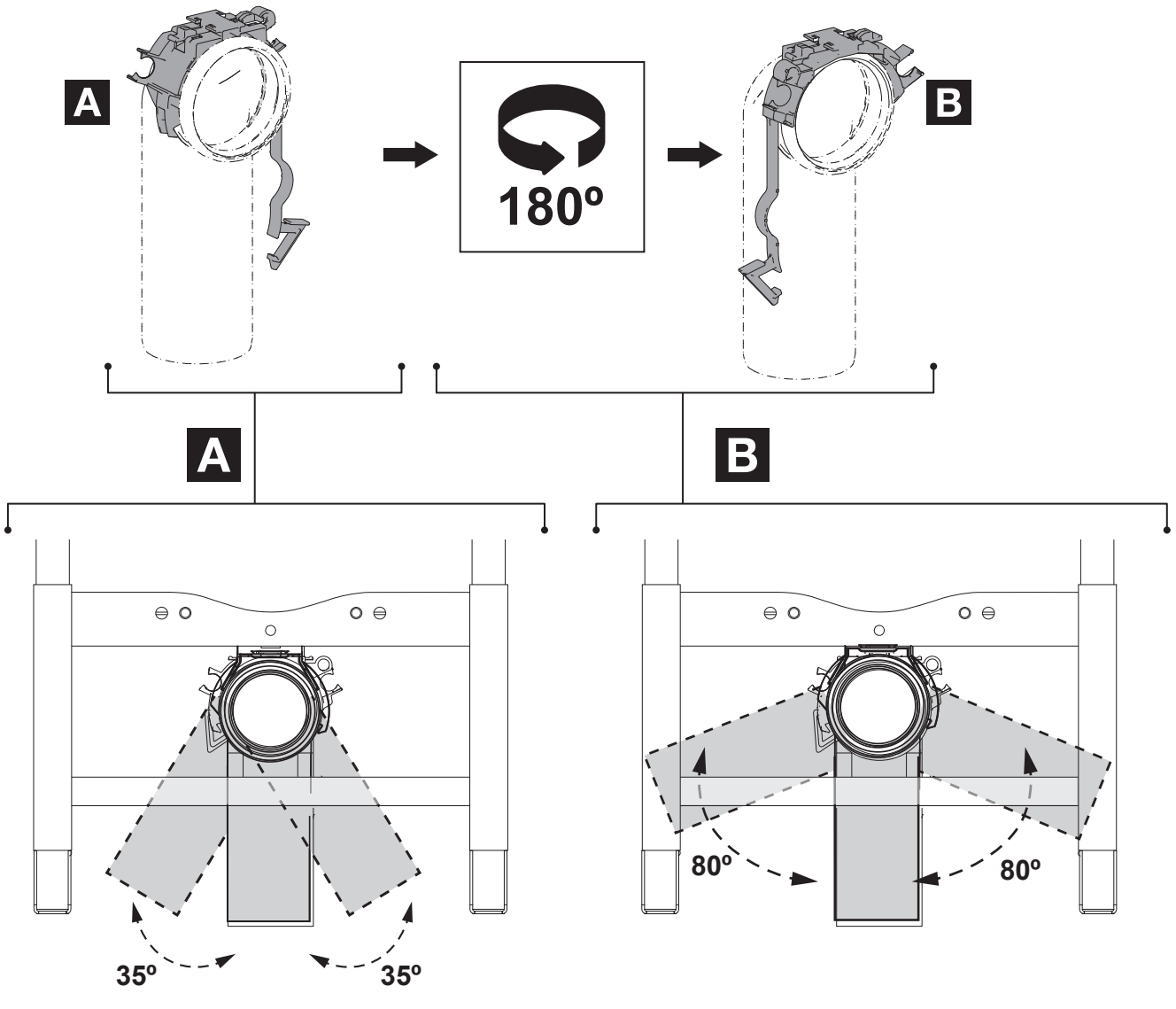
A
180º
B
A
B
35º
35º
80º
80º

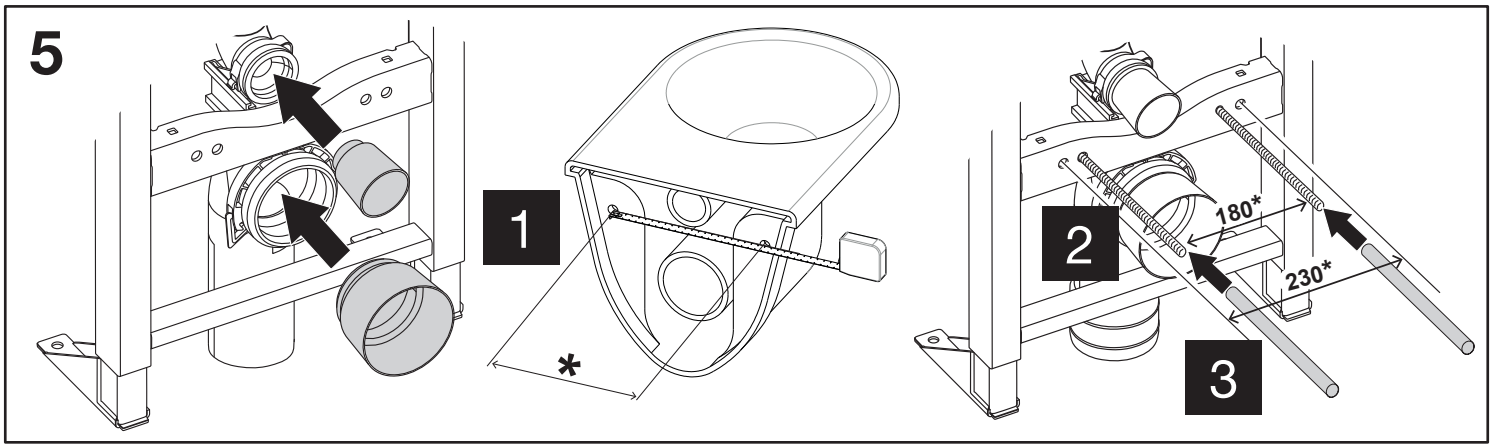
5
1
*
2
180*
230*
3

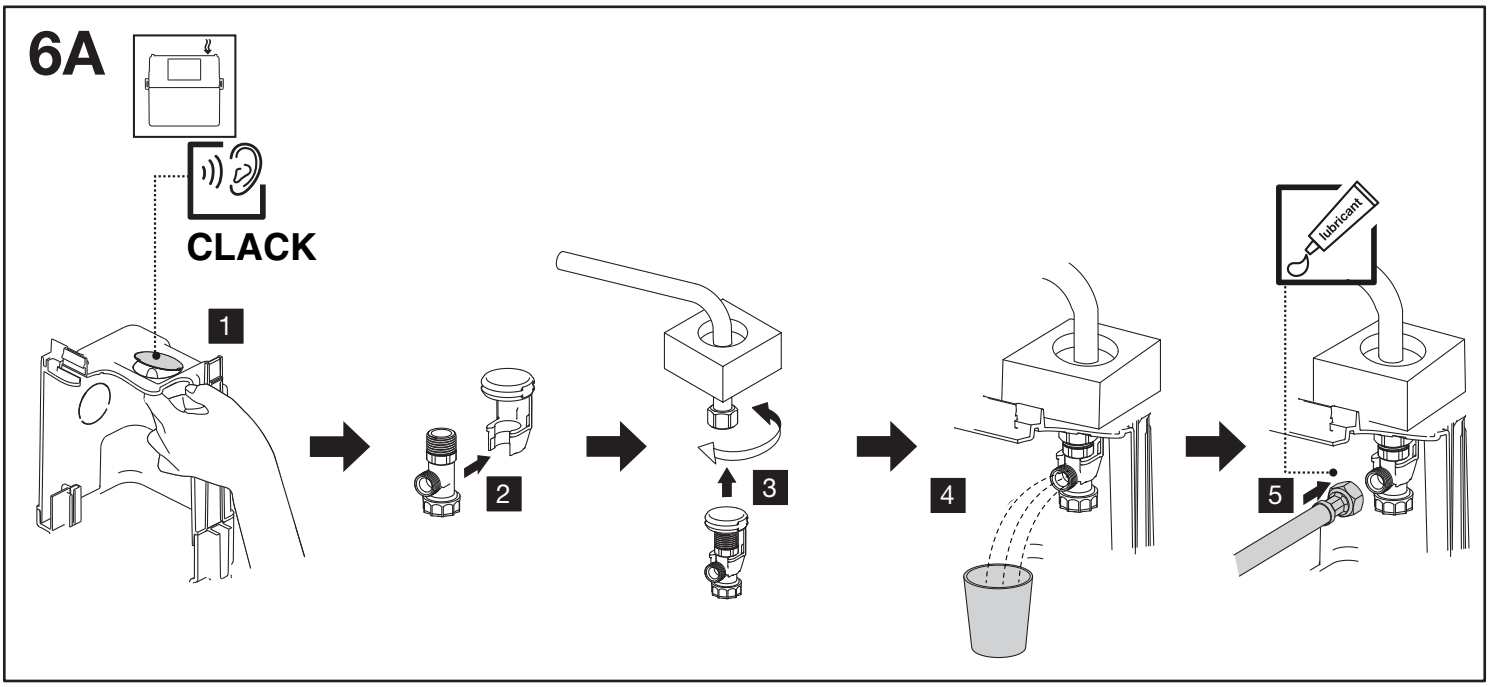
6A
CLACK
1
2
3
4
lubricant
5

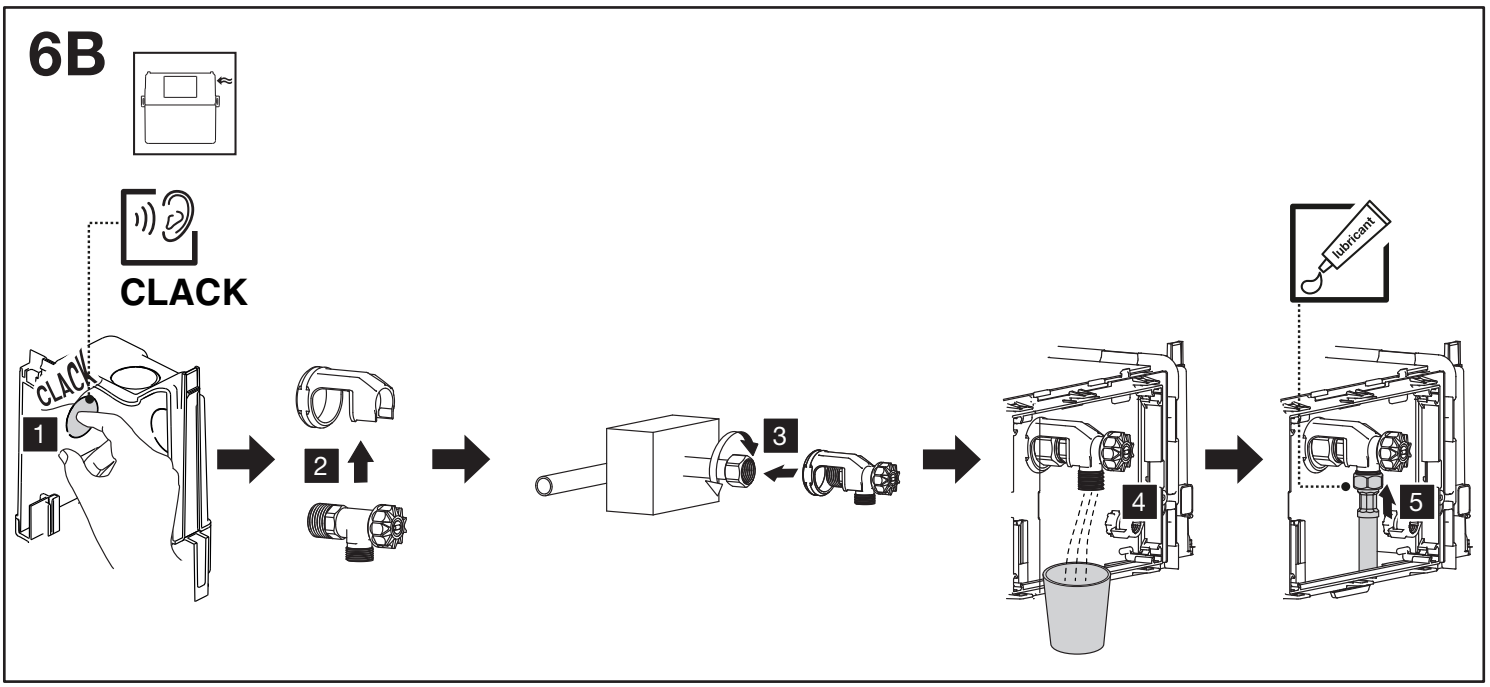
6B
CLACK
CLACK
1
2
3
4
lubricant
5

8A TOP

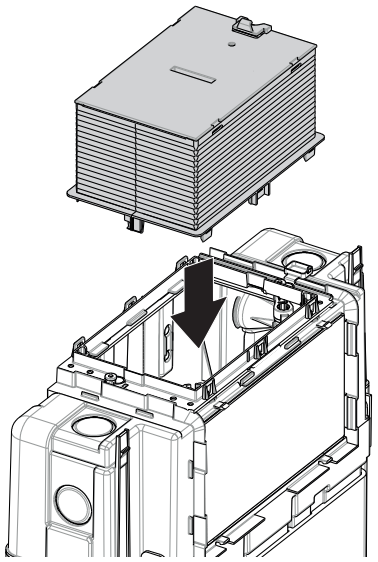

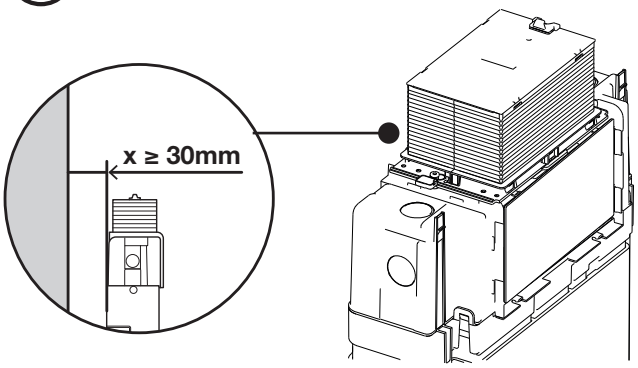

8B FRONT

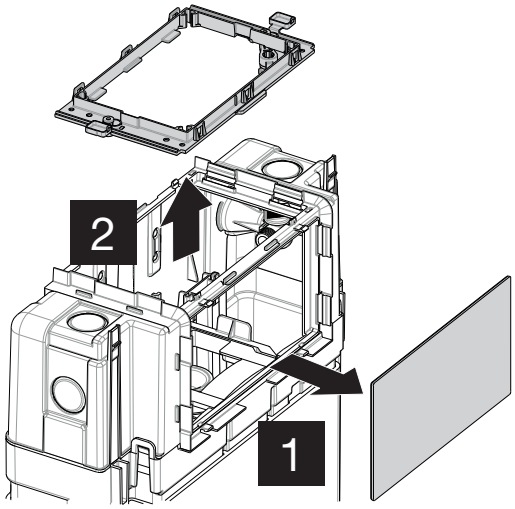

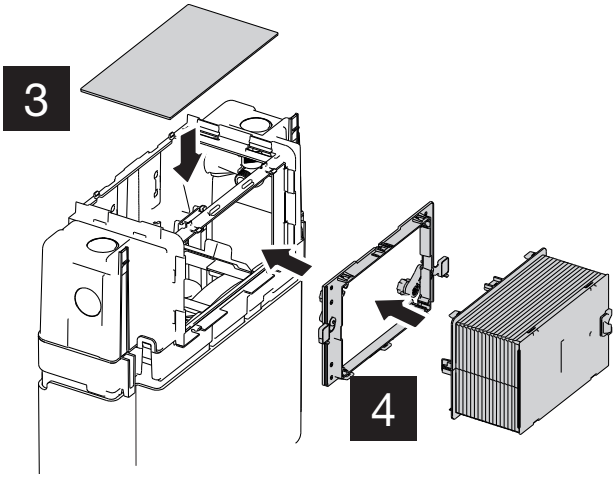

9

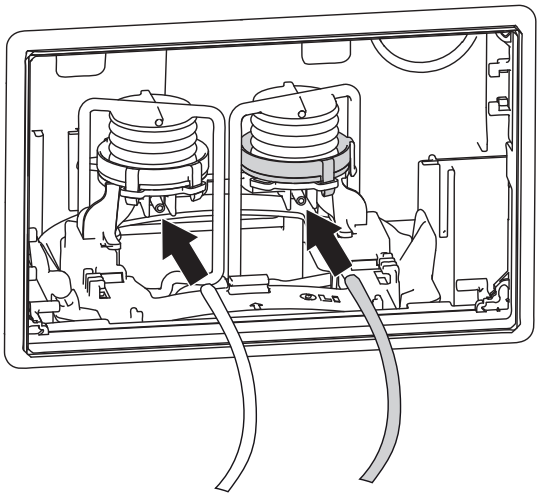

10

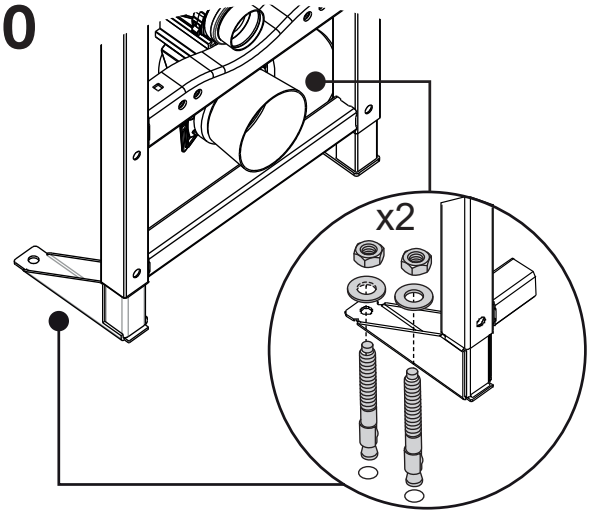

11

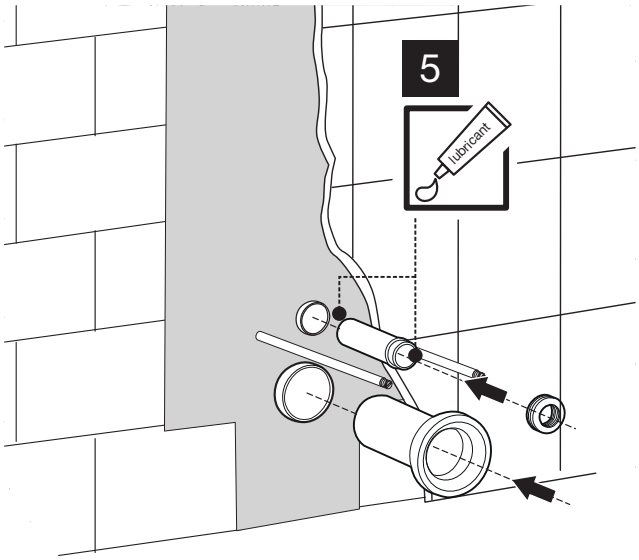

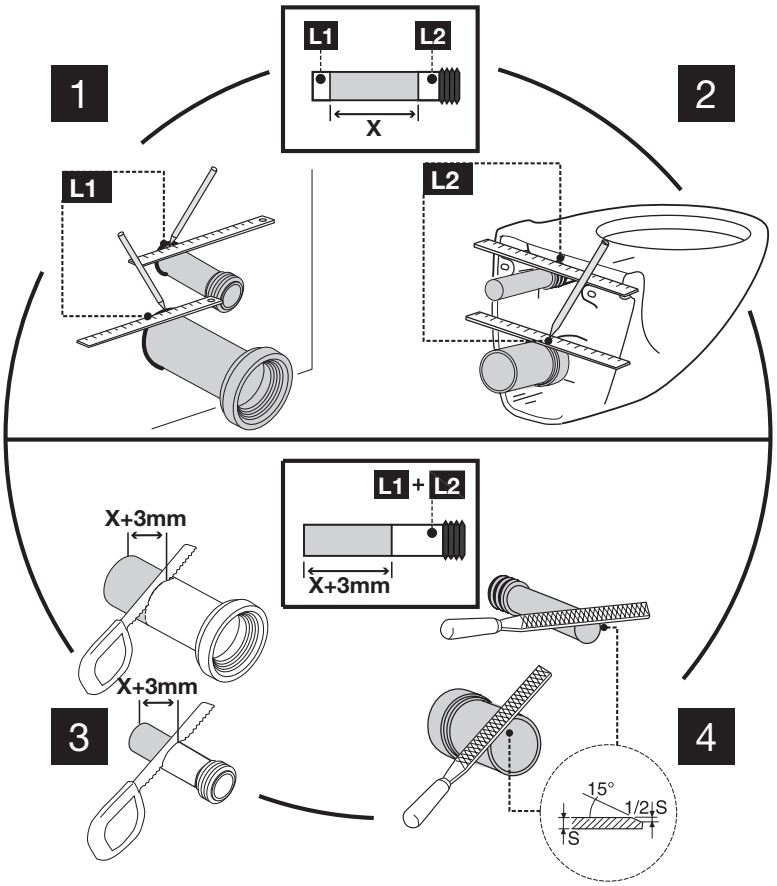

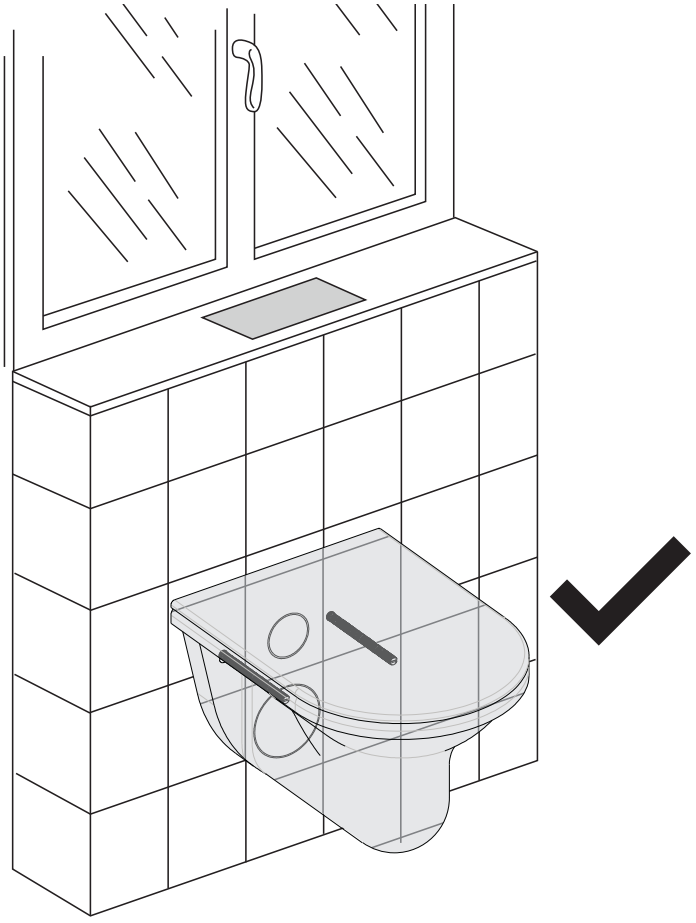

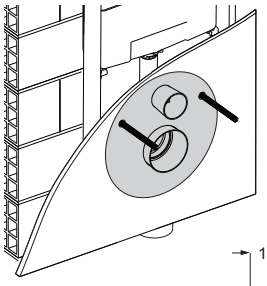

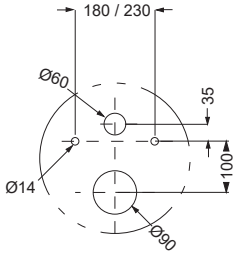
180 / 230
Ø60
35
100
Ø14
Ø90

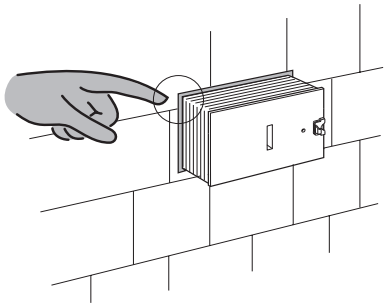

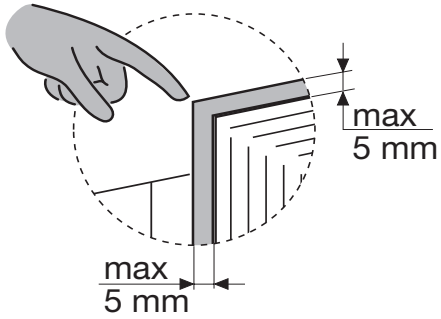
max
5 mm

max
5 mm



www.oli-world.com

comercial@oli-world.com | info@olisrl.it