OLI120 PLUS

MINIMUM WALL COVERING THICKNESS



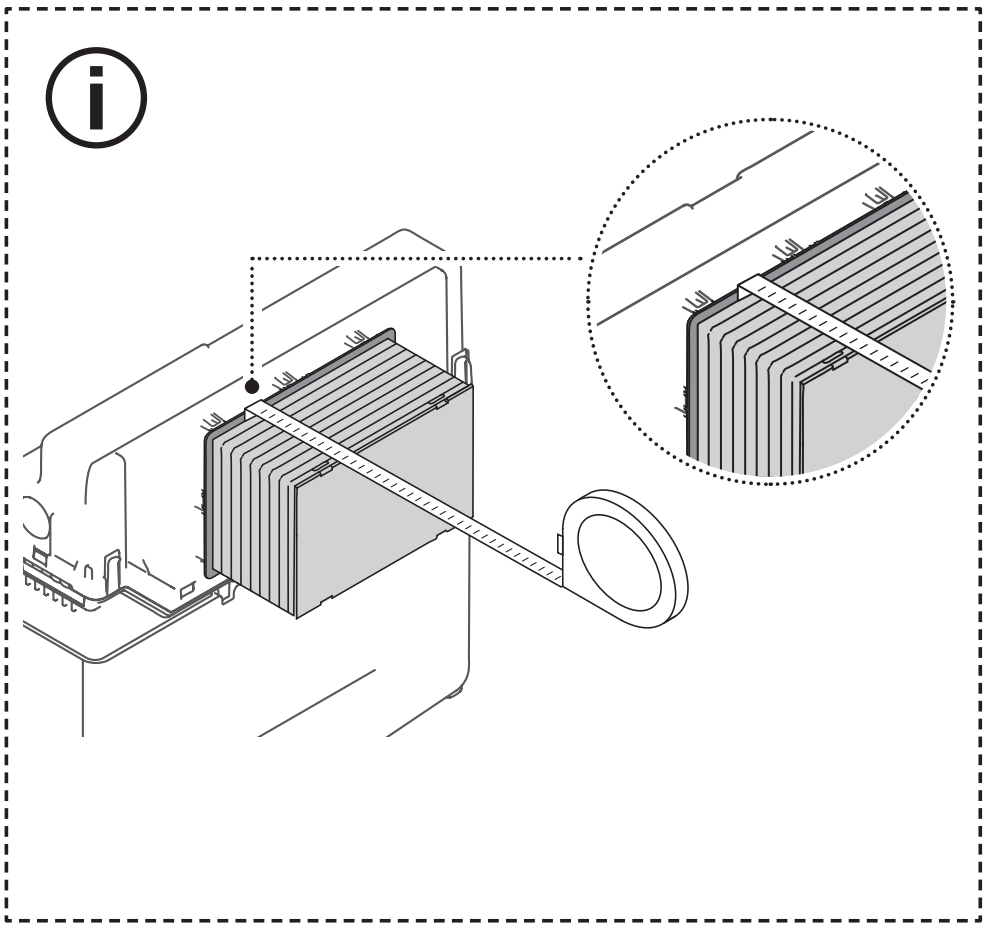

HALLO

NT



=

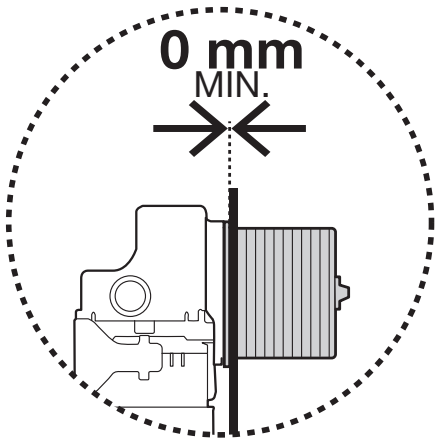

GLASSY

NT



=

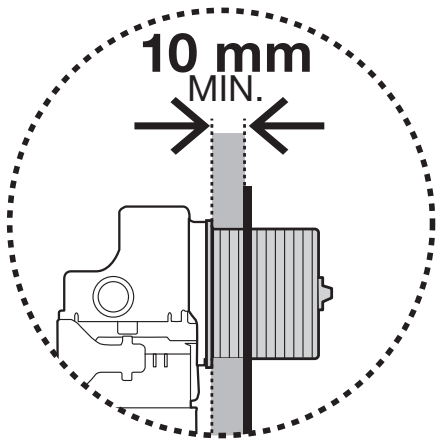

eLINE

E

=

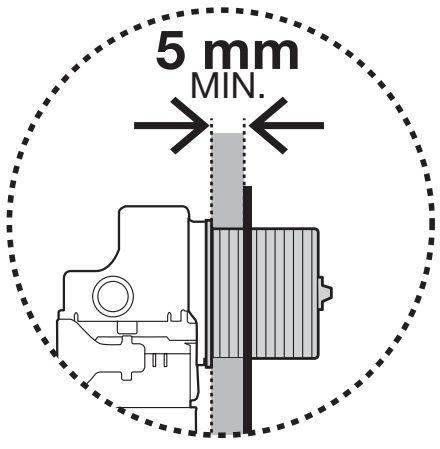

KEY

E

=

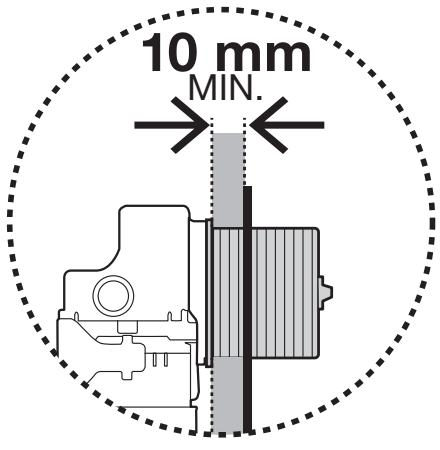

MOON

NT

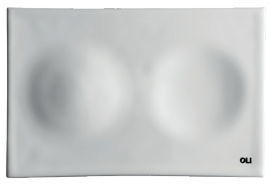

=

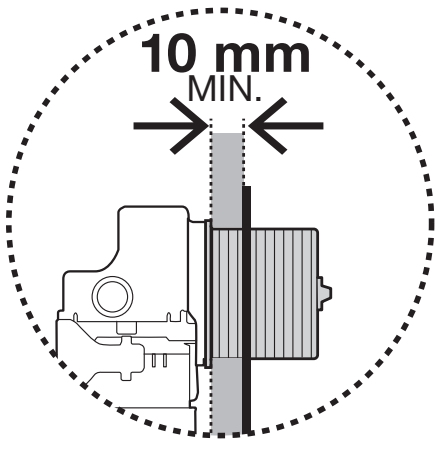

LESS IS MORE

M



=

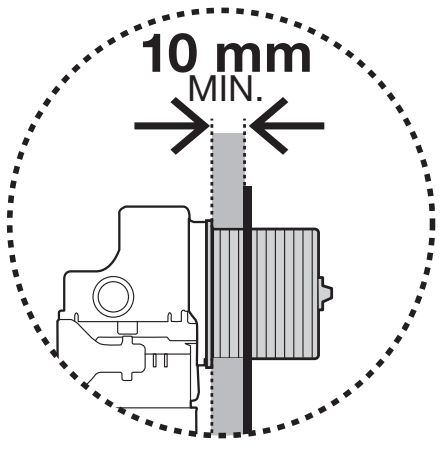

M MECHANICAL VERSION P PNEUMATIC VERSION NT NO-TOUCH VERSION E ELECTRONIC VERSION

SM15

P



=

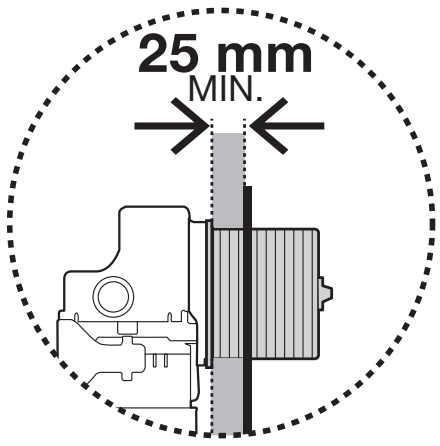

TRUMPET

P

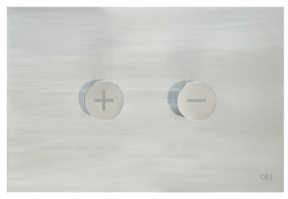

=

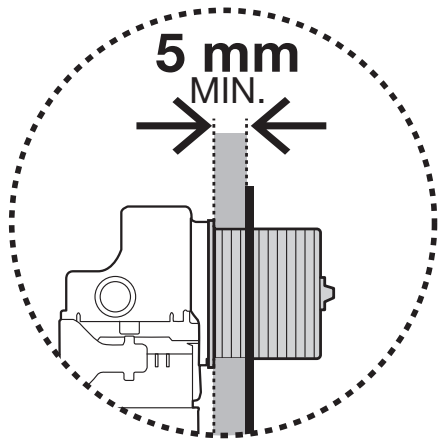

BLINK

P

=

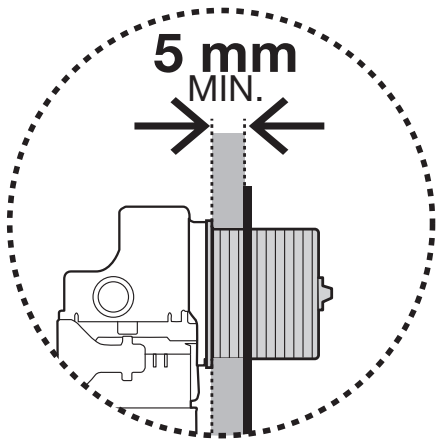

OCEANIA

P

=

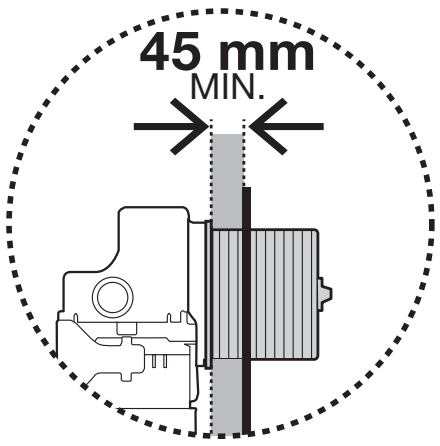

KEY

M



=

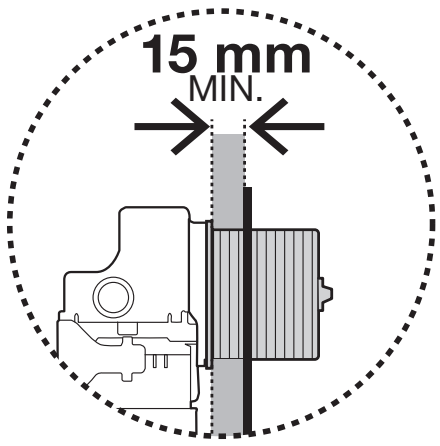

ELECTRA III

E



=

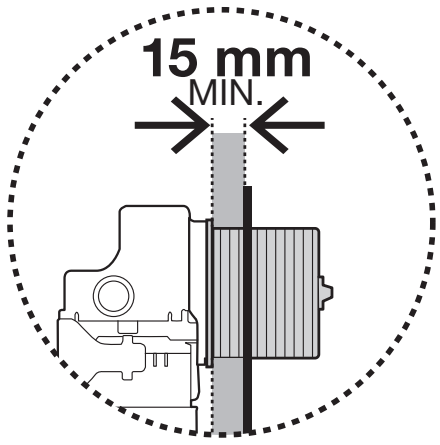

GLAM

M



=

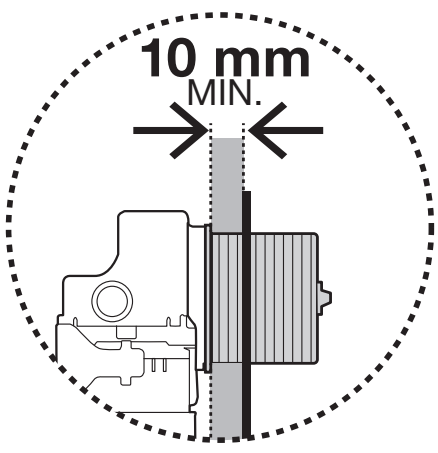

GLAM | OLIpure®

M



=

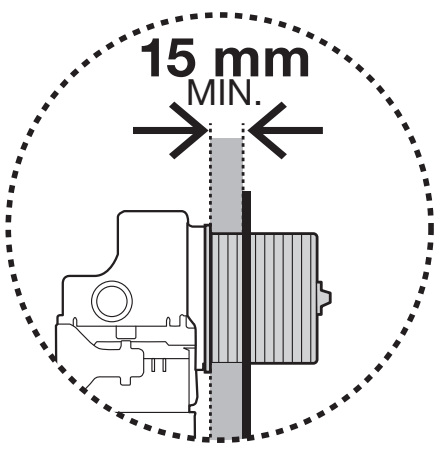

PLAIN

M



=

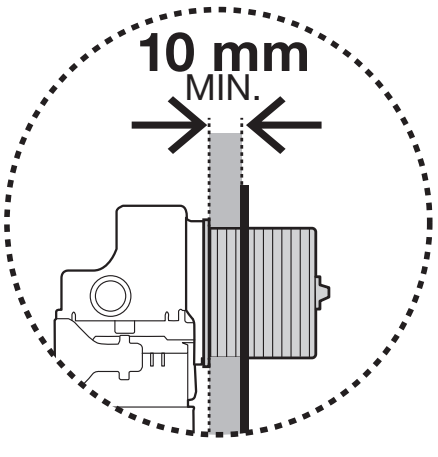

GLOBE

M

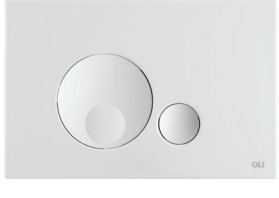

=

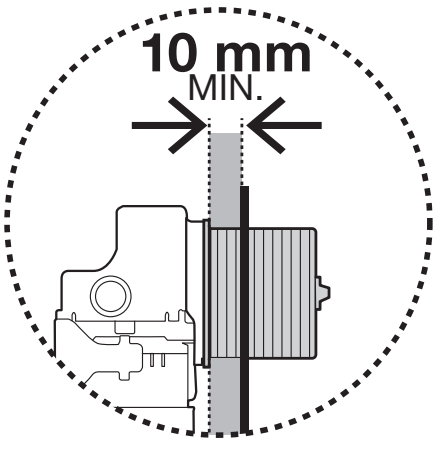

M MECHANICAL VERSION P PNEUMATIC VERSION NT NO-TOUCH VERSION E ELECTRONIC VERSION

RIA

M

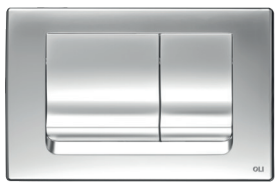

=

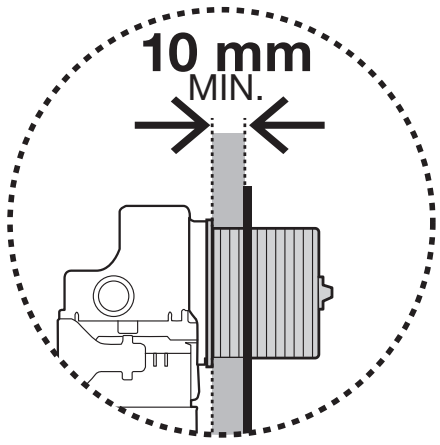

METAL

M



=

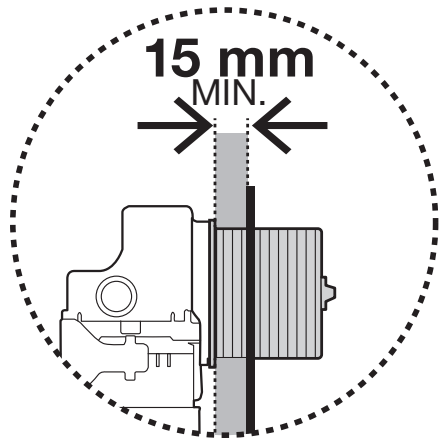

RIVER

M

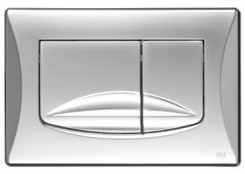

=

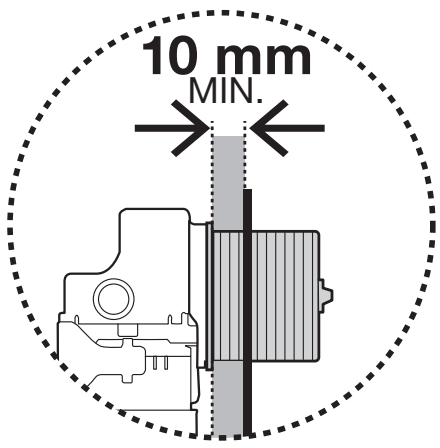

SALINA

P

=

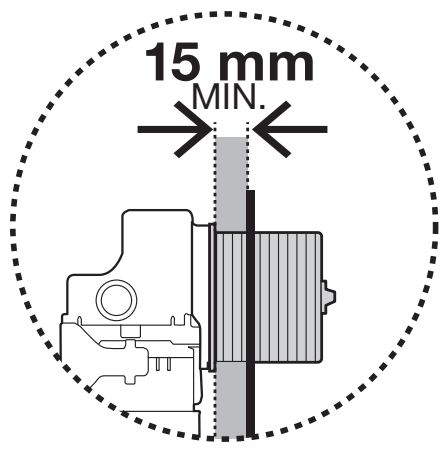

SLIM

M



=

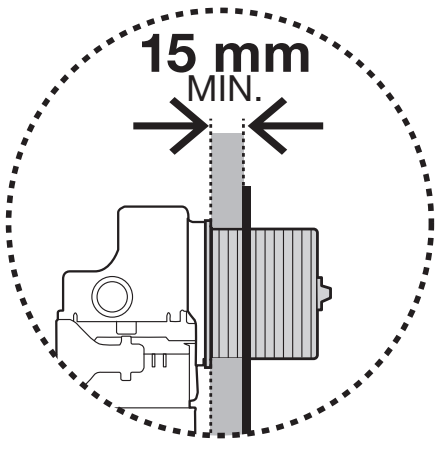

KARISMA

P



=

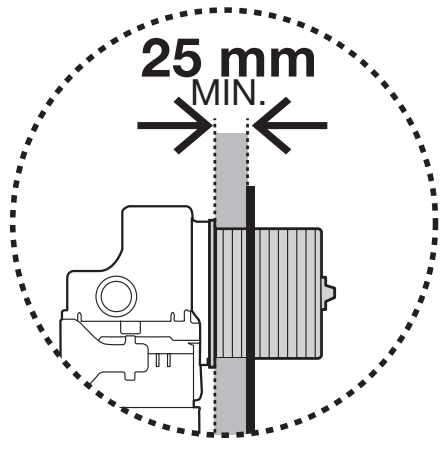

M MECHANICAL VERSION P PNEUMATIC VERSION NT NO-TOUCH VERSION E ELECTRONIC VERSION