OLI120 PLUS

SANITARBLOCK 3P

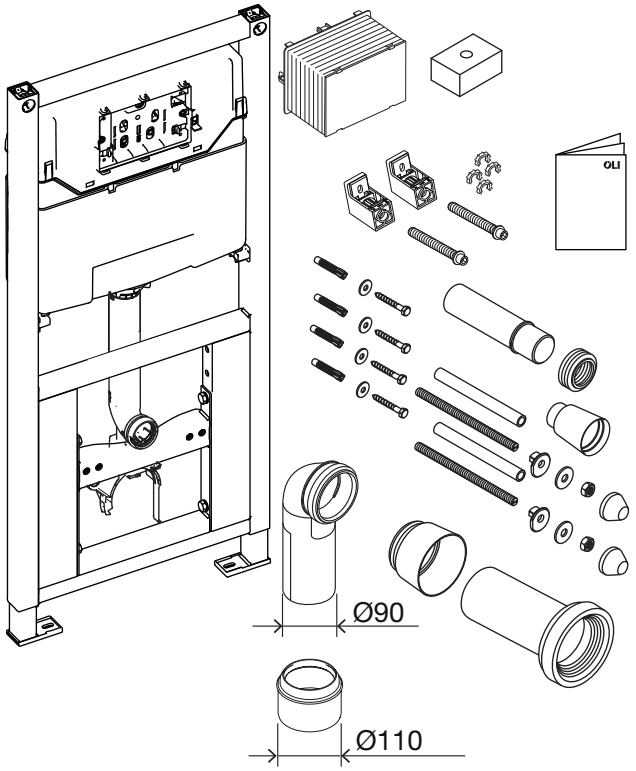

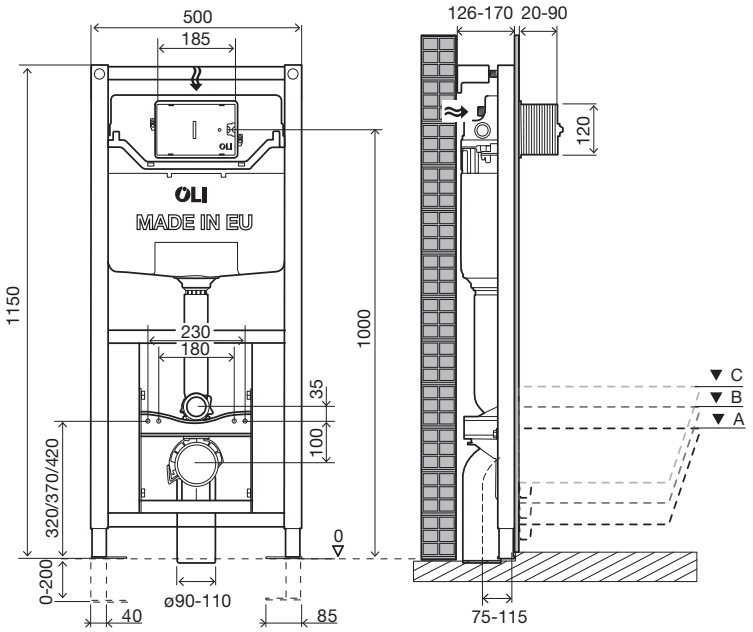

A	B	C
±400 (pre-set)	±450	±500

(dimensions in milimetres)

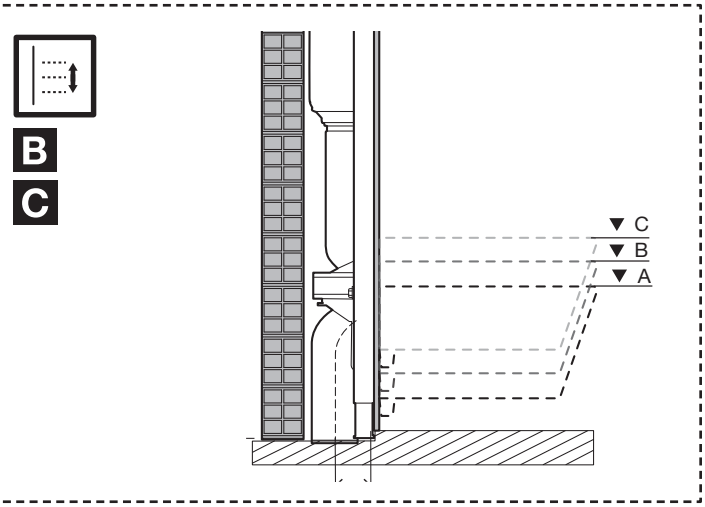

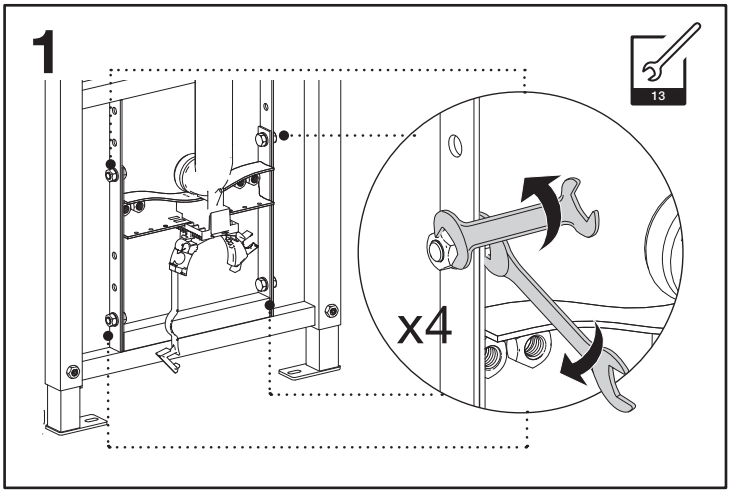

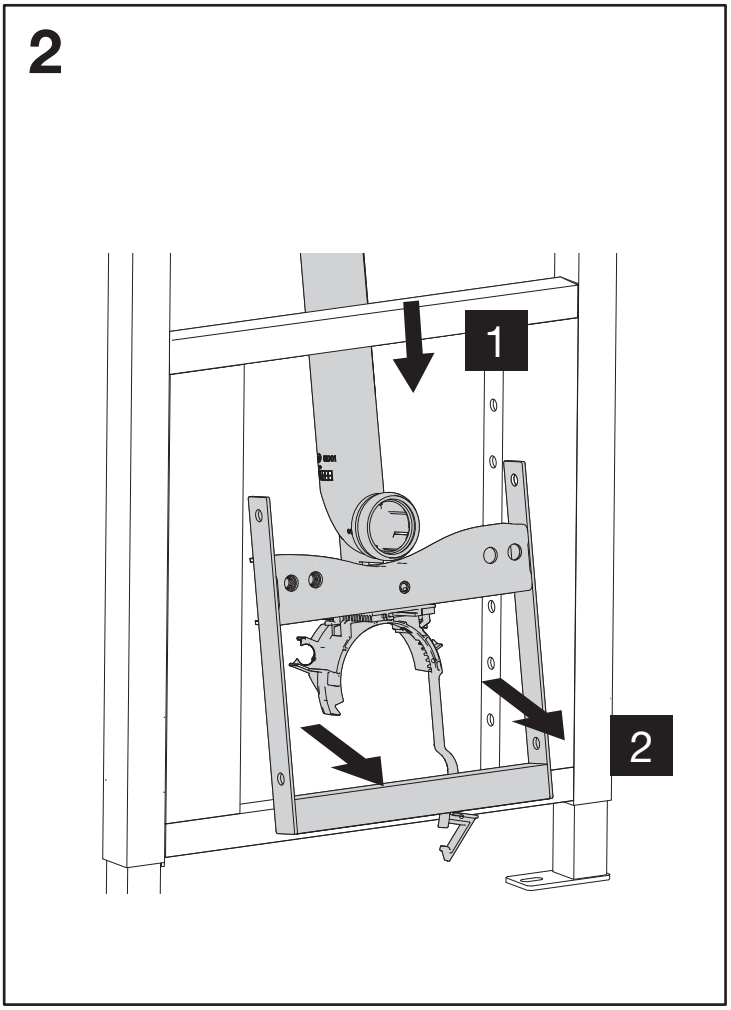

3

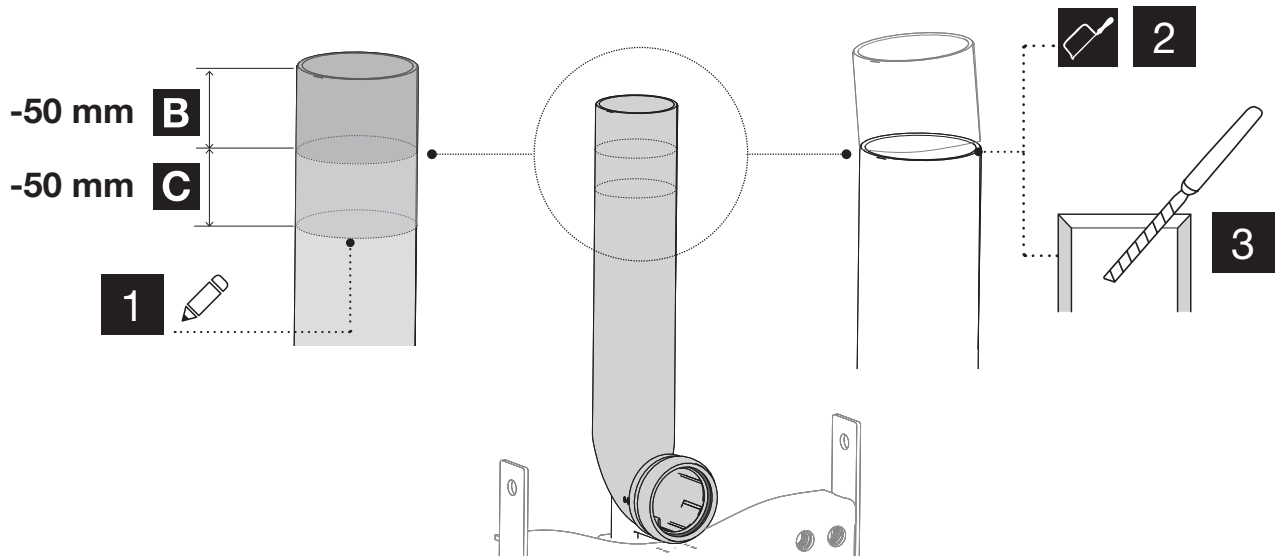

4

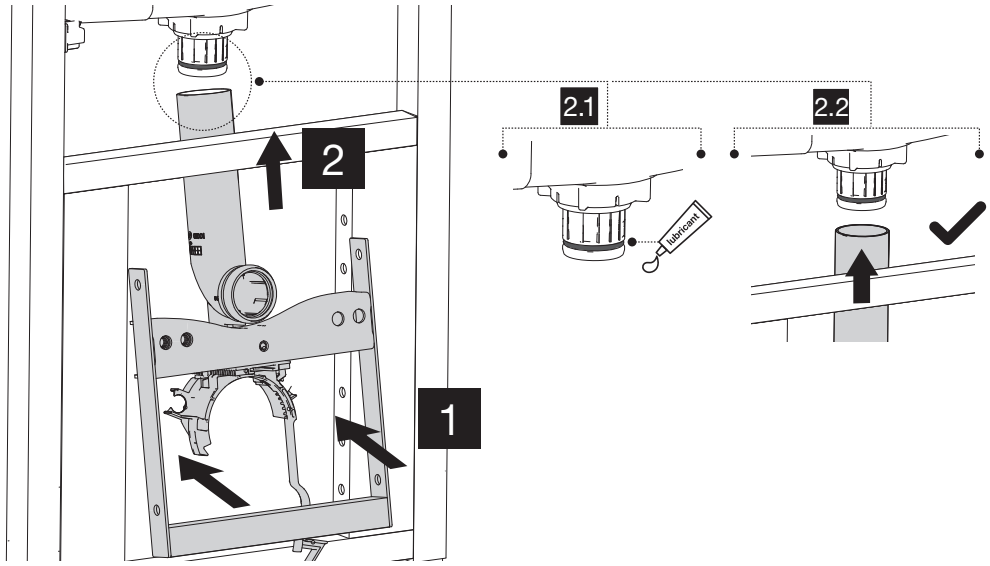

5

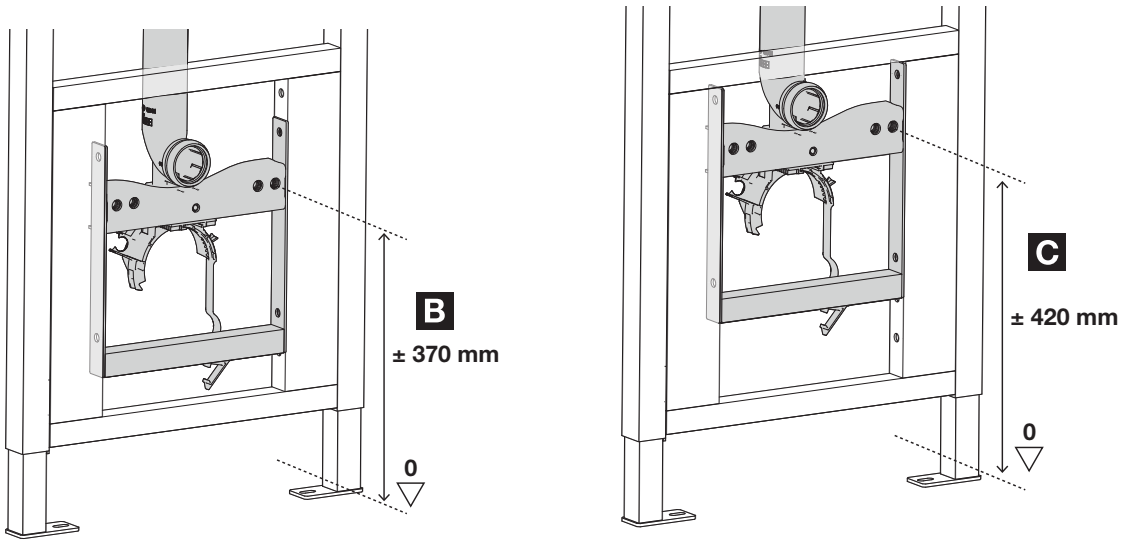

6

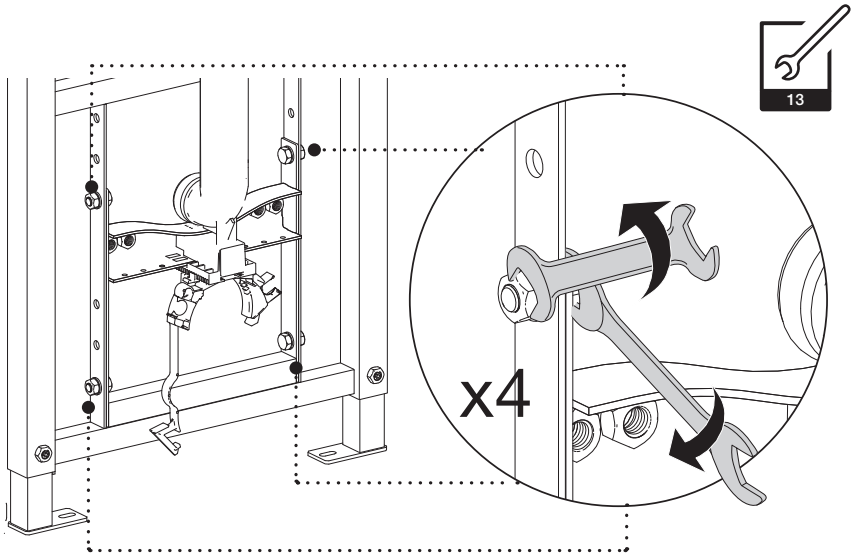

7

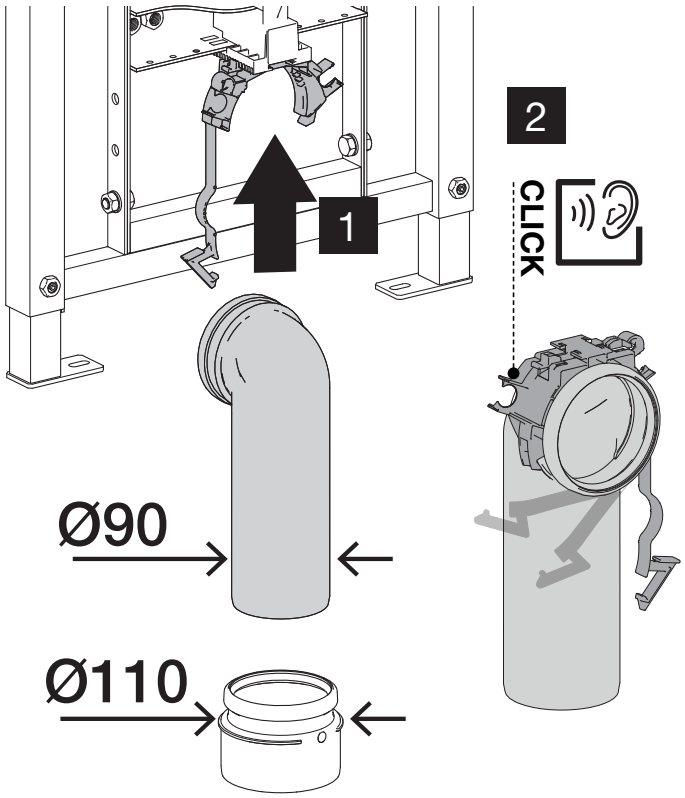

8

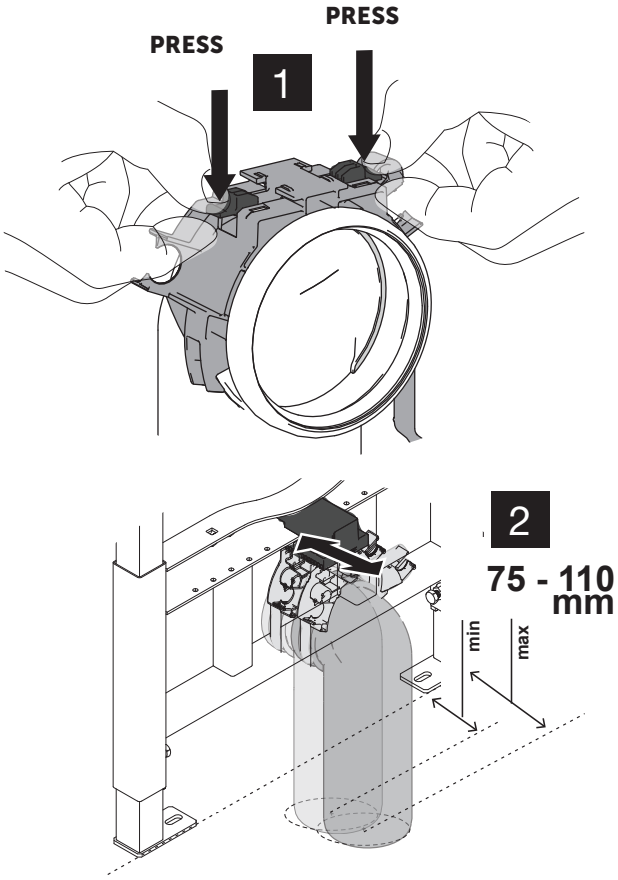

9

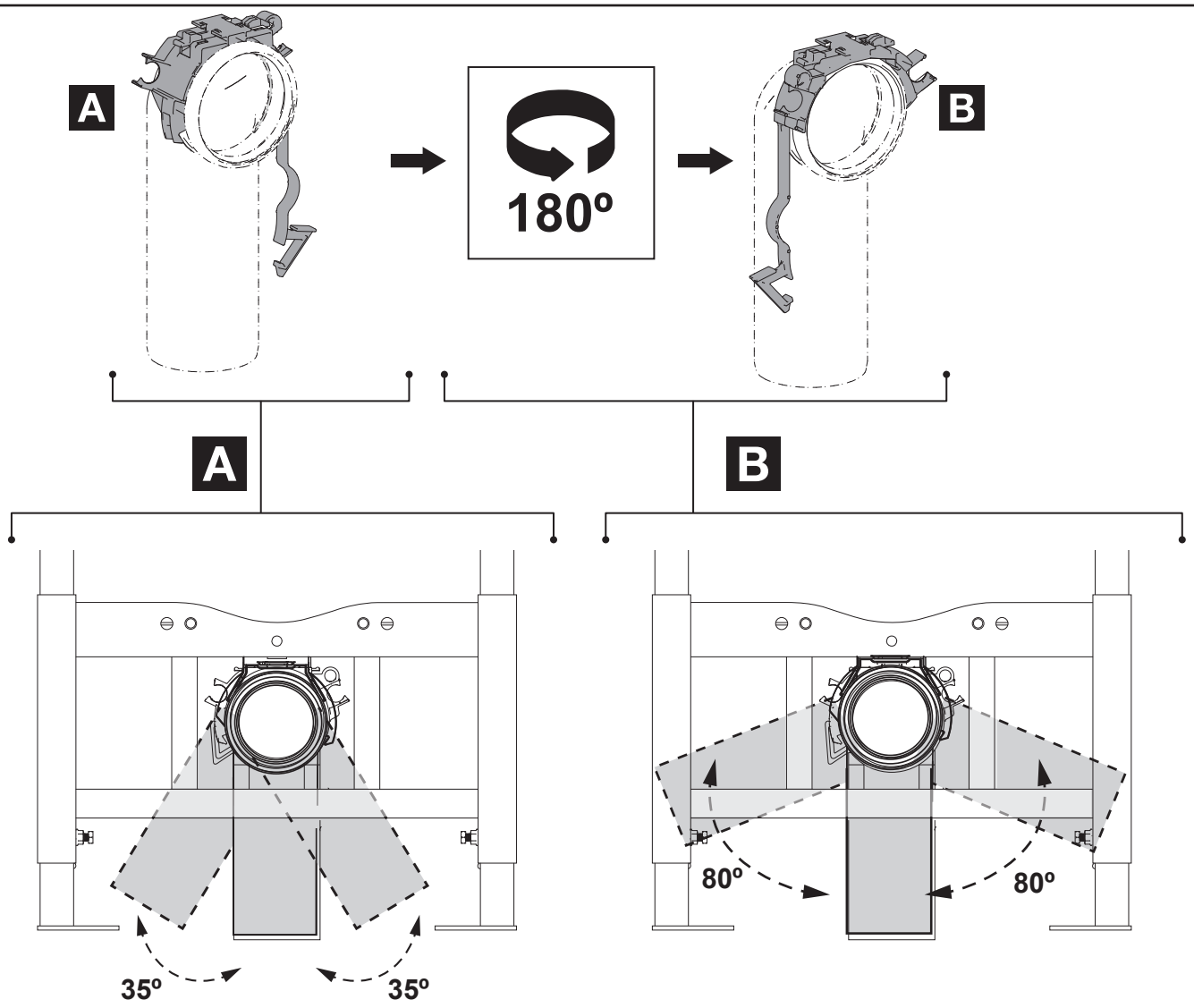

10

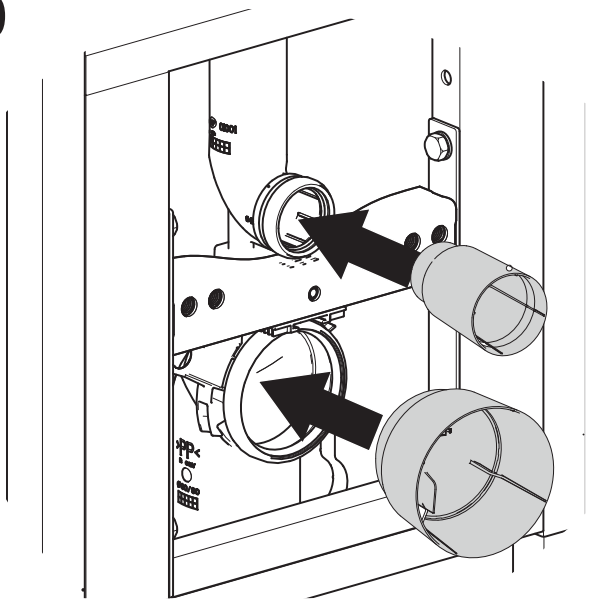

11

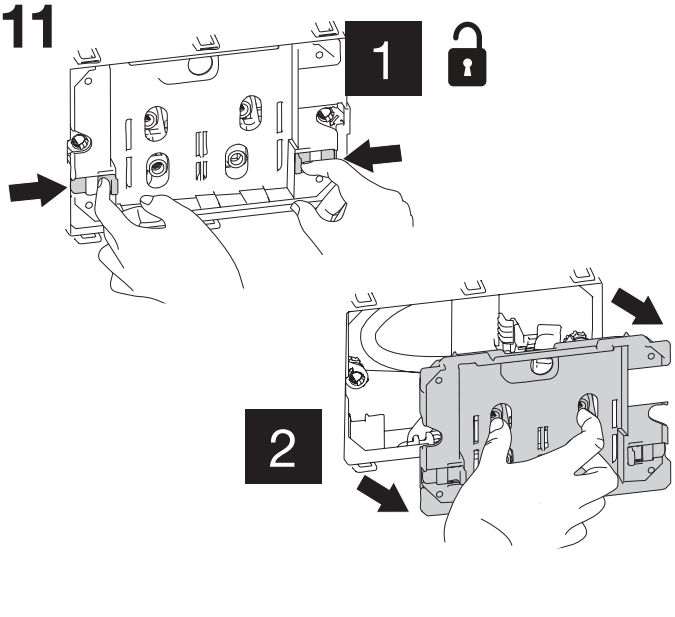

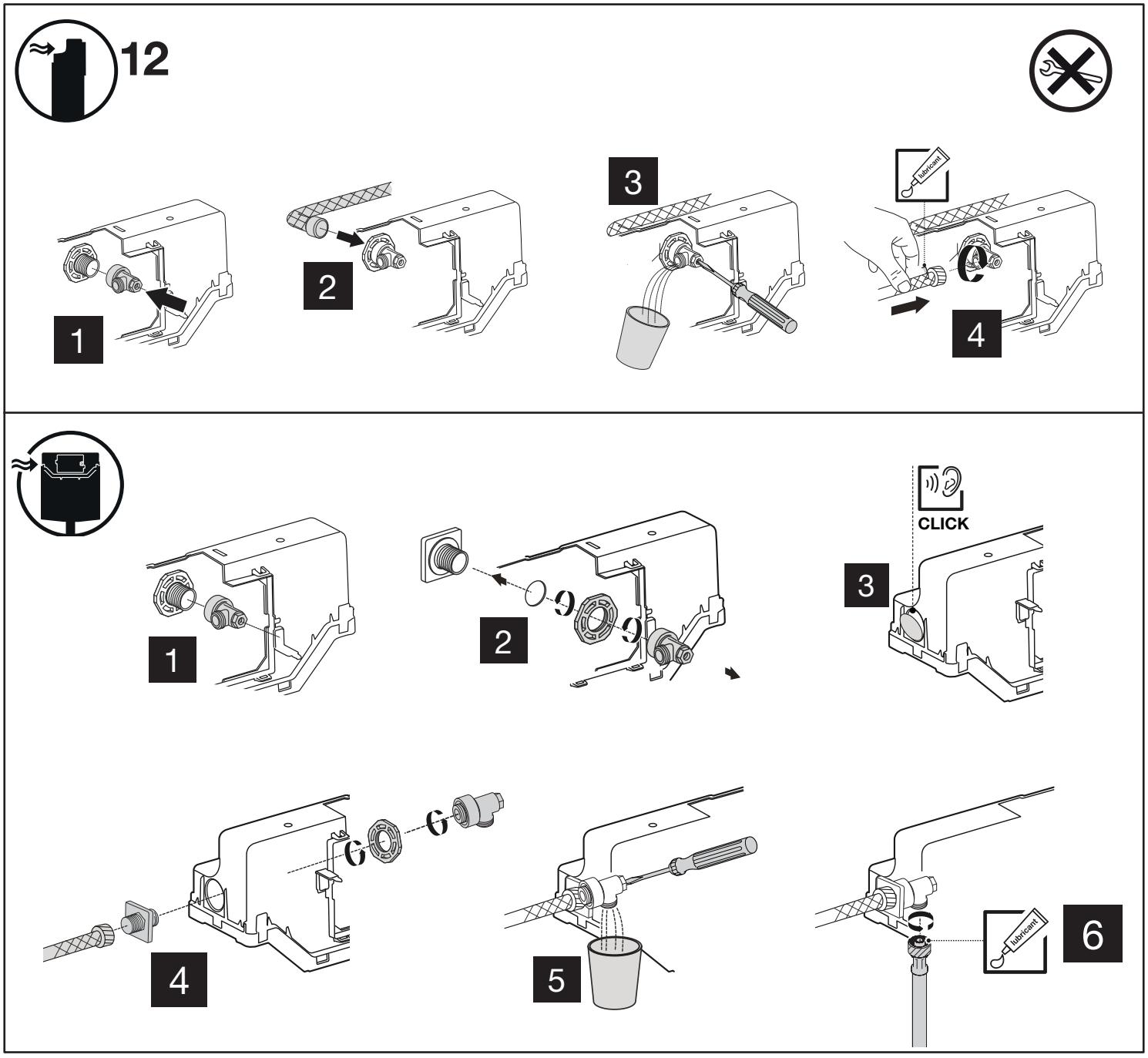
12
1
2
3
lubricant
4
1
2
CLICK
3
4
5
lubricant
6

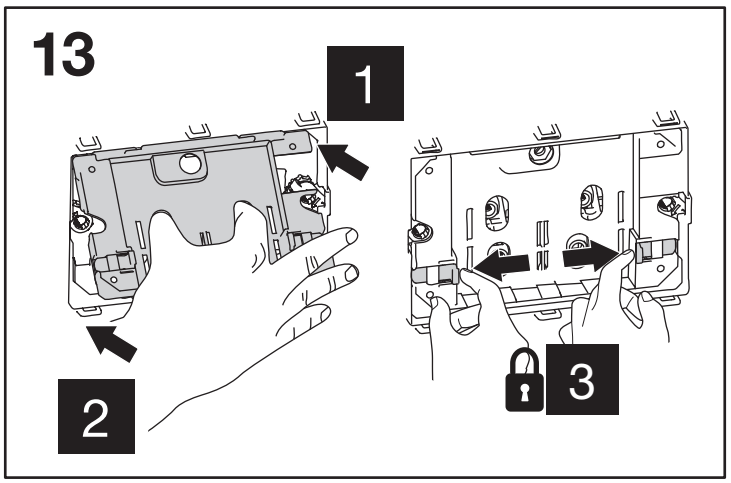
13
1
2
3

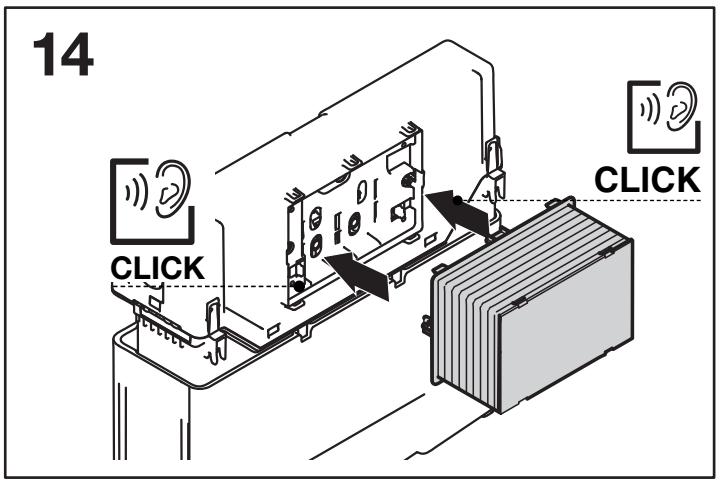
14
CLICK
CLICK

15

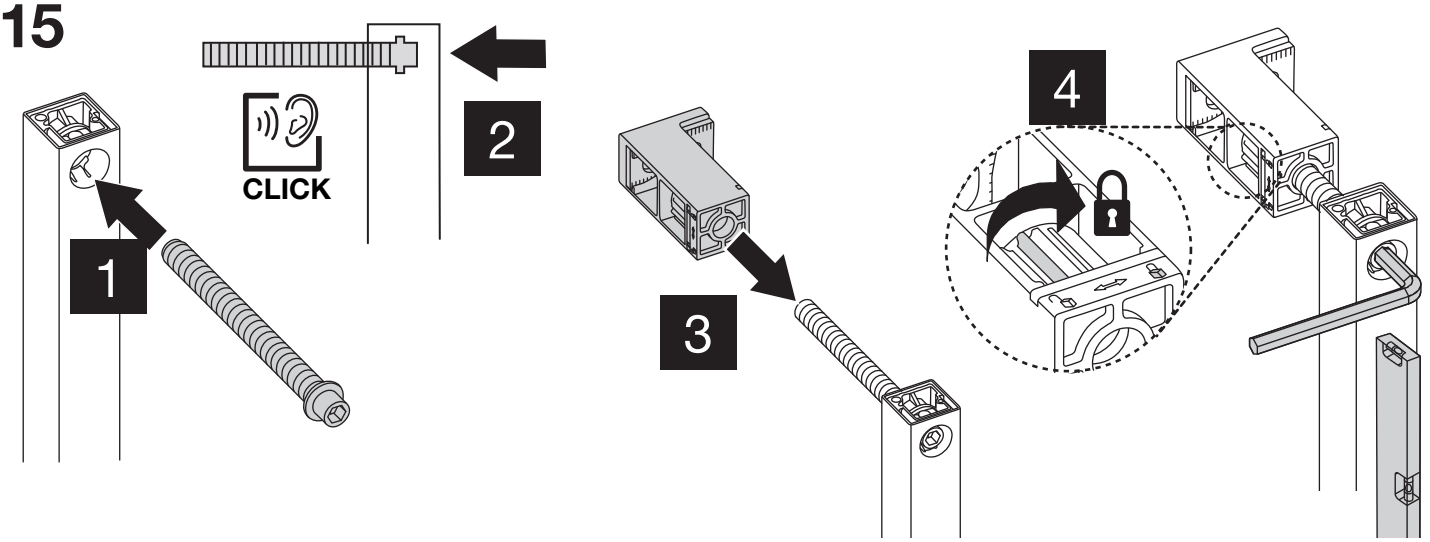

16

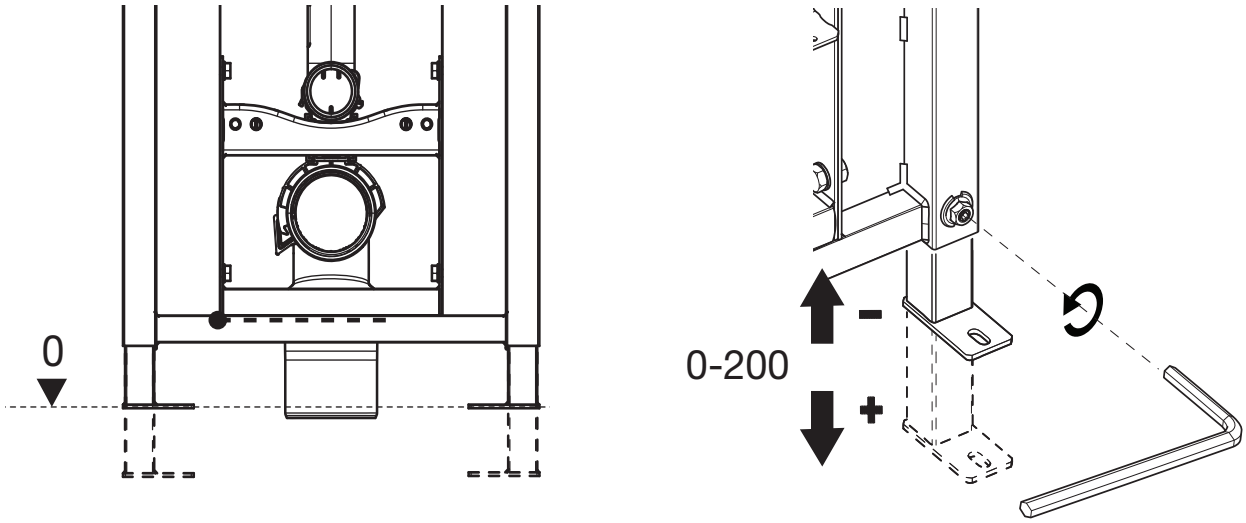

17

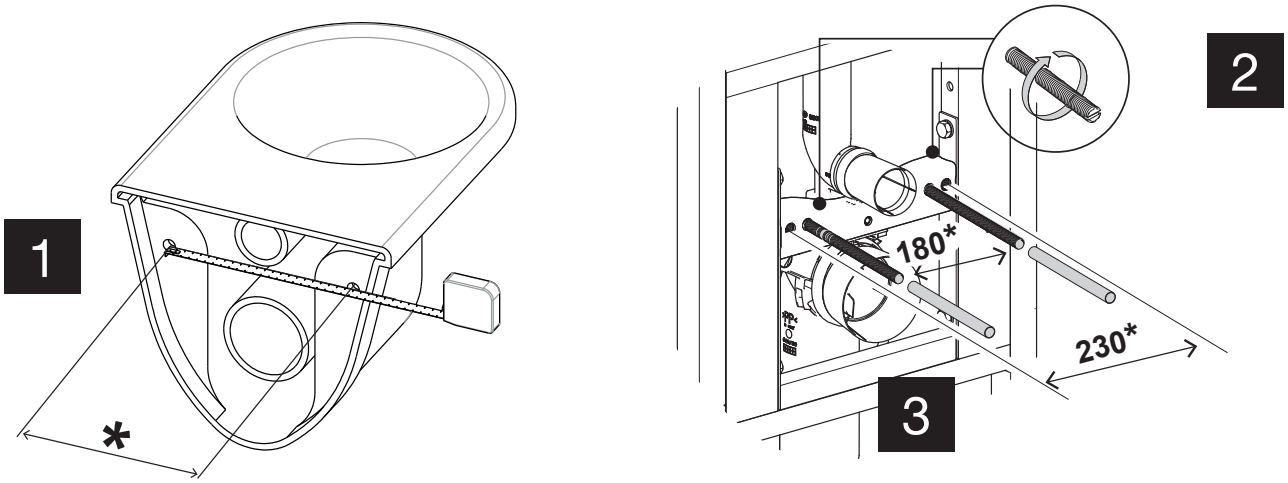

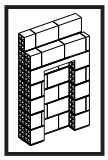

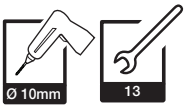
Ø 10mm
13

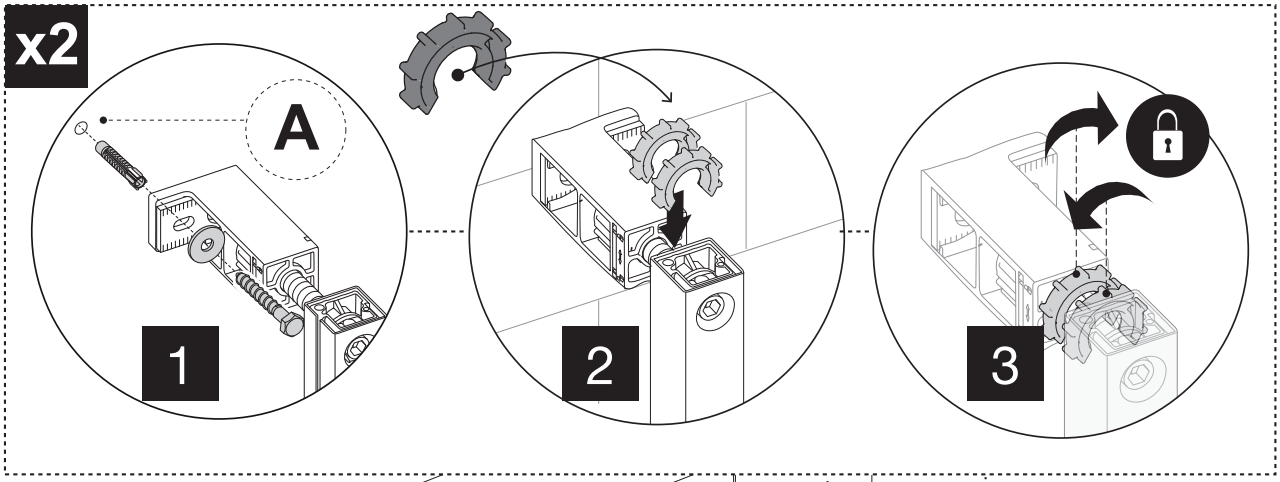
x2
A
1
2
3

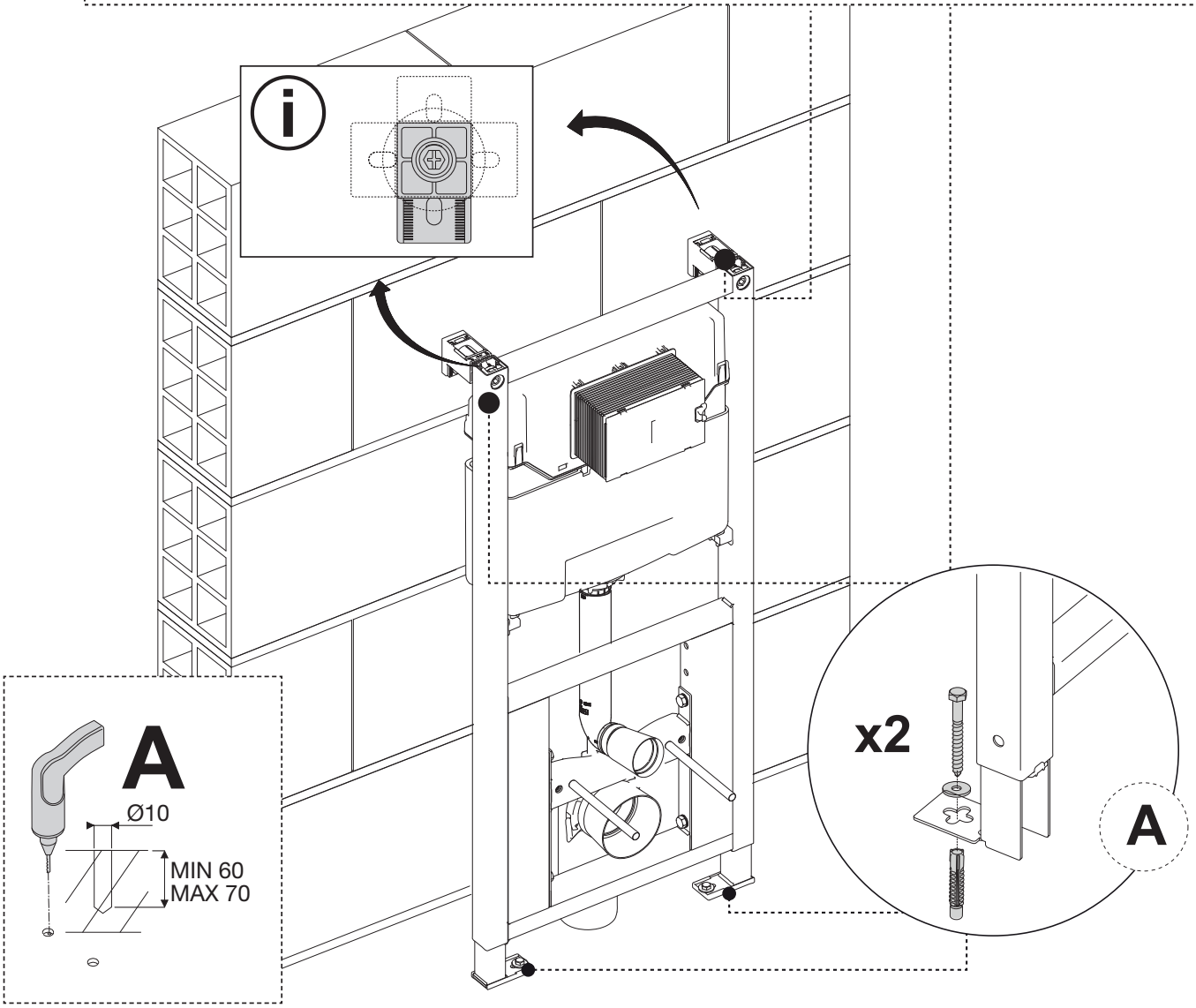
A
Ø10
MIN 60
MAX 70
x2
A

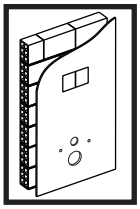

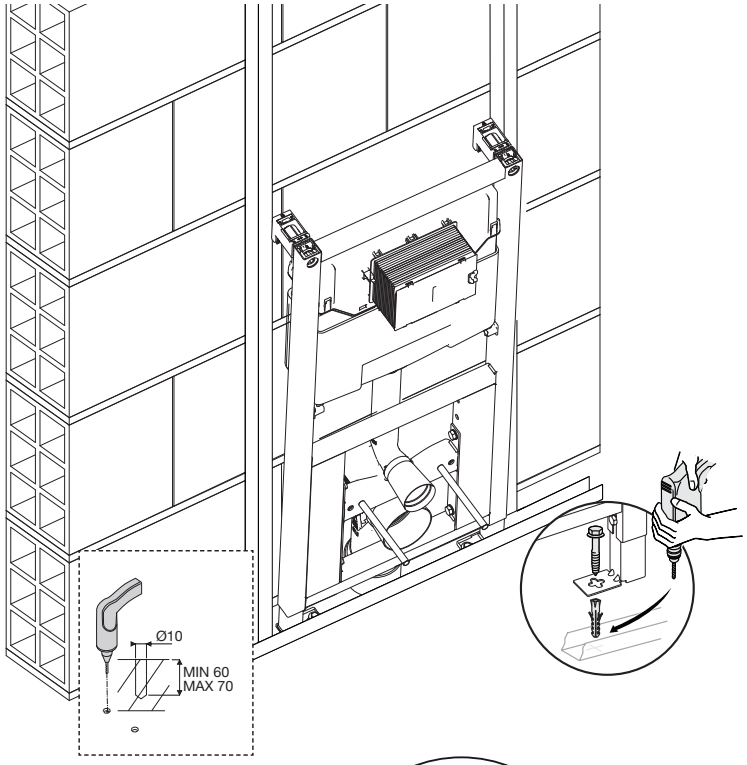
Ø10
MIN 60
MAX 70

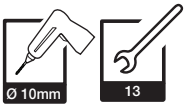
Ø 10mm
13

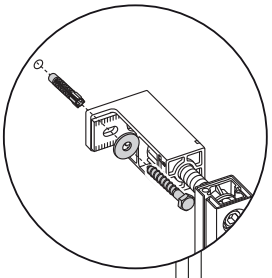

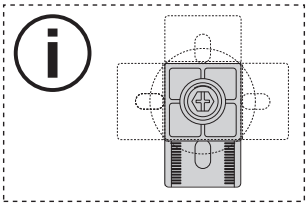

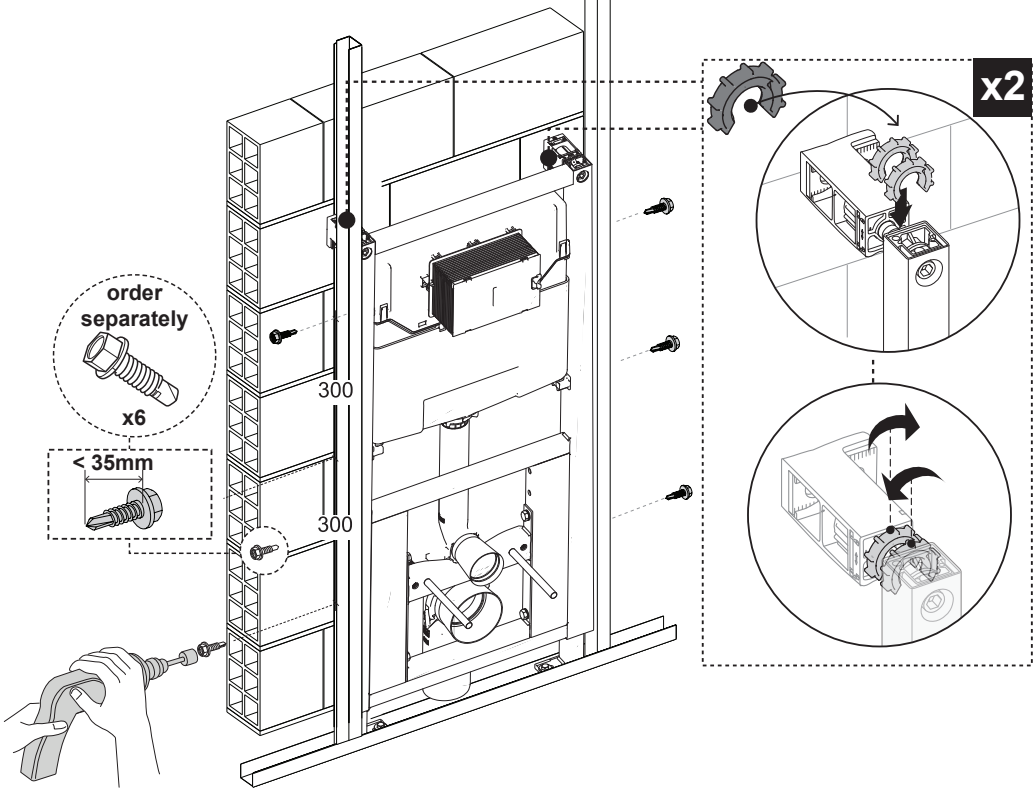
order
separately
x6
< 35mm
300
300
x2

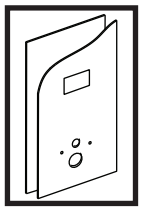

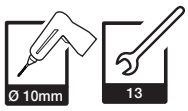
Ø 10mm
13

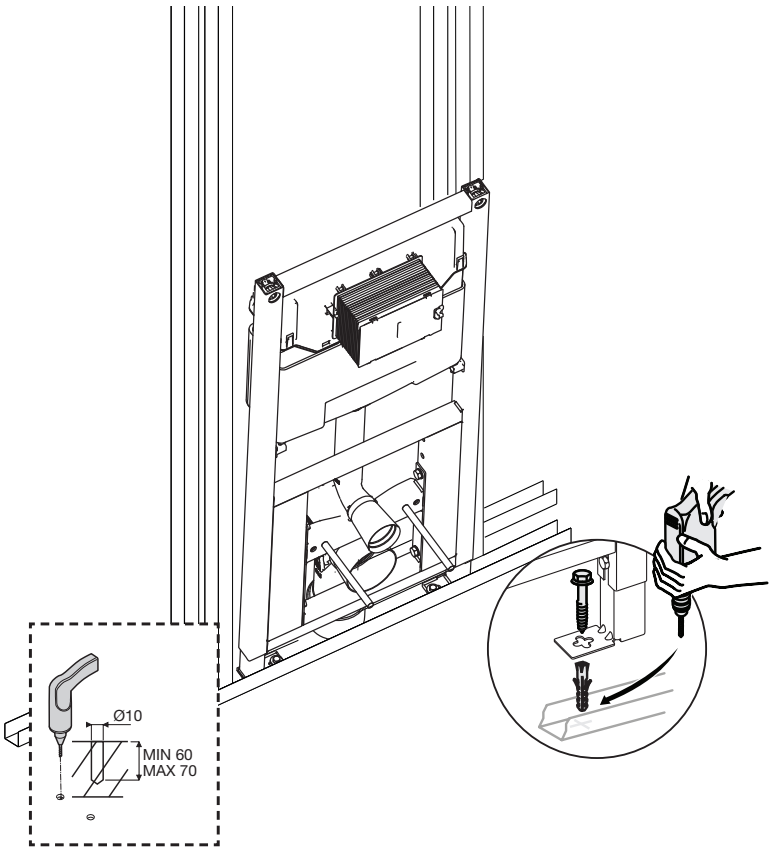
Ø10
MIN 60
MAX 70

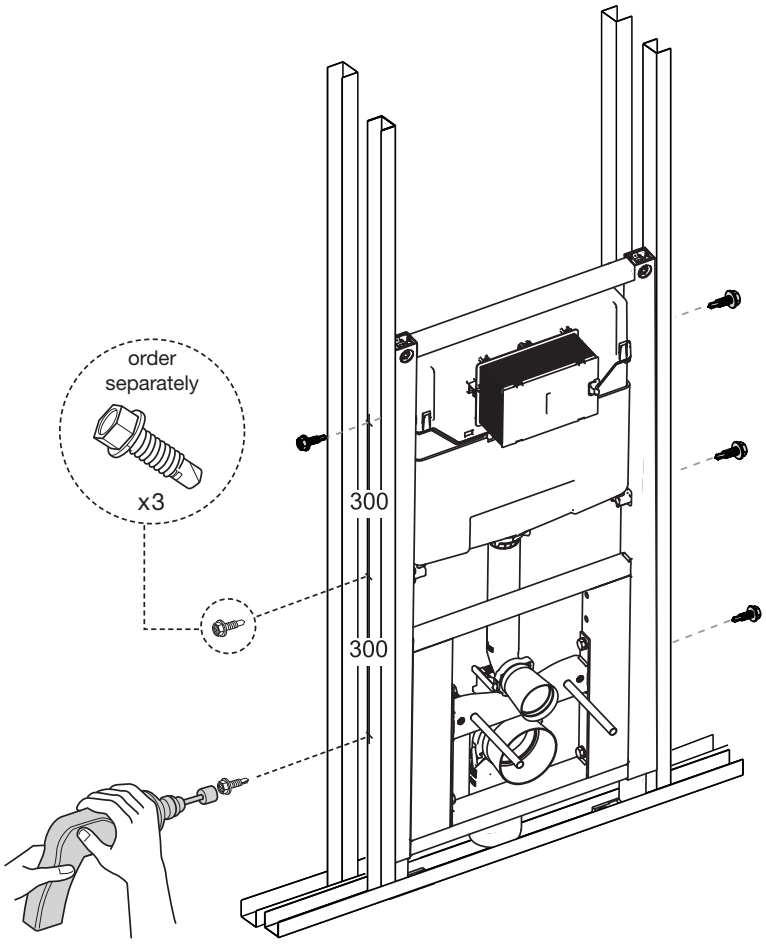
order
separately
x3
300
300

18

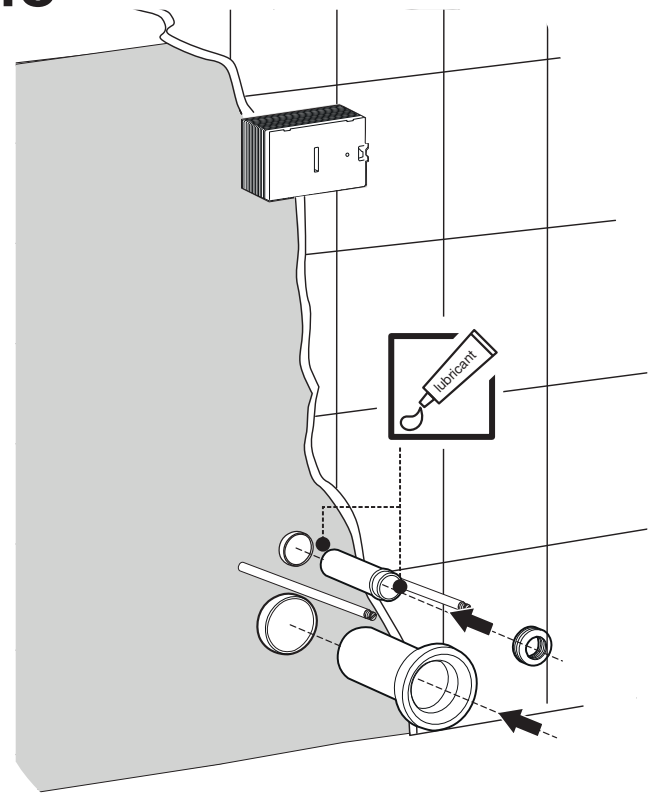
lubricant

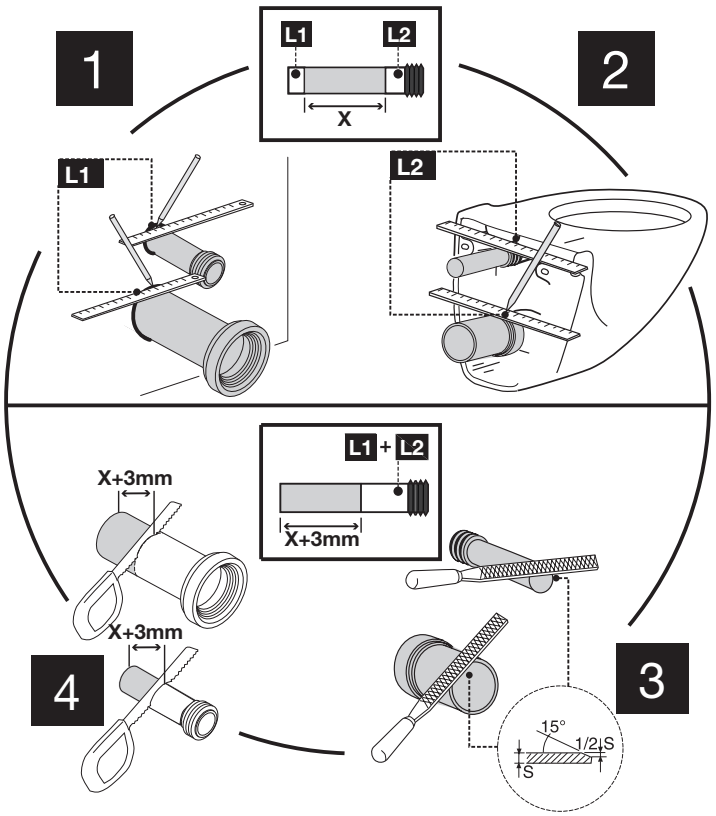
1
L1
L2
X
2
L1
L2
L1 + L2
X+3mm
X+3mm
X+3mm
4
3
15°
1/2 S
S

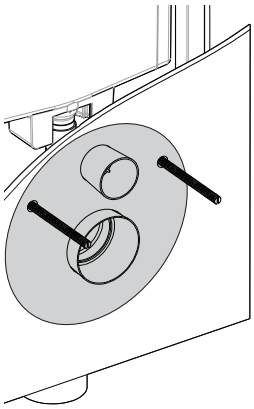

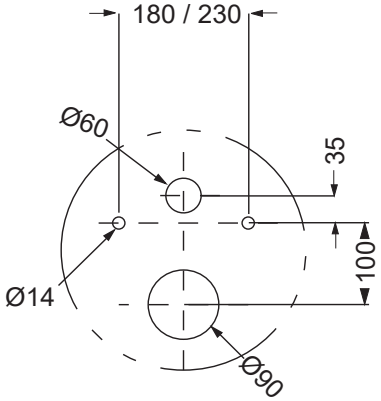
180 / 230
Ø60
35
100
Ø14
Ø90

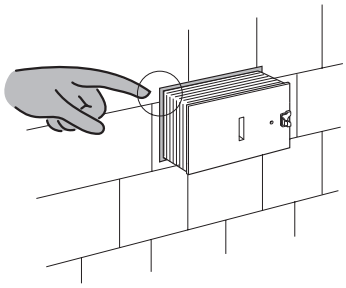

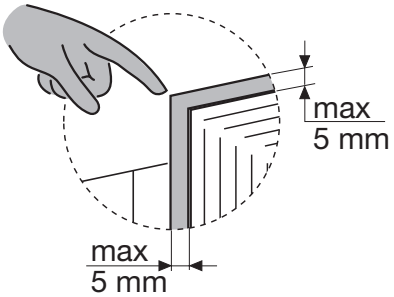
max
5 mm
max
5 mm

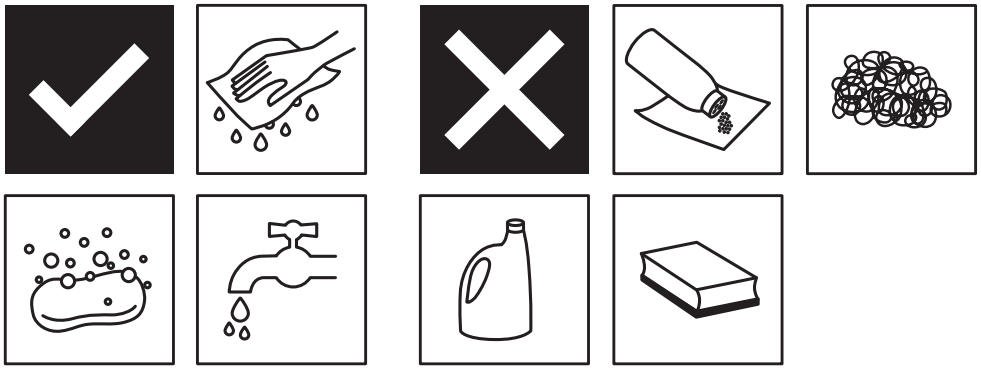

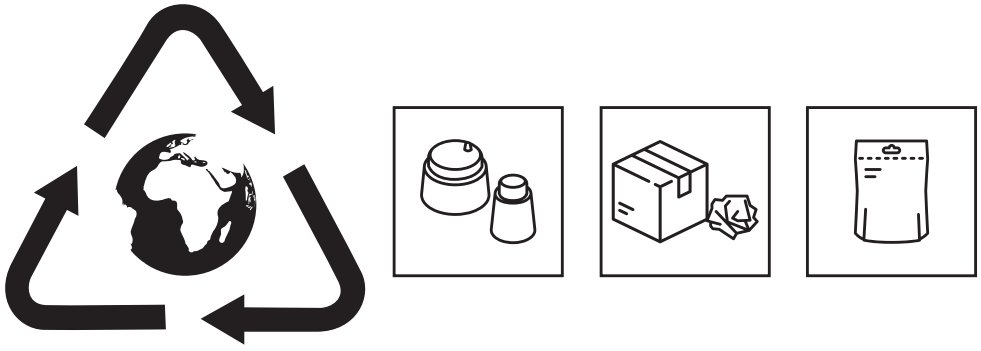

www.oli-world.com
comercial@oli-world.com | info@olisrl.it