OLI74 S90 | OLIpure®

MECHANIC

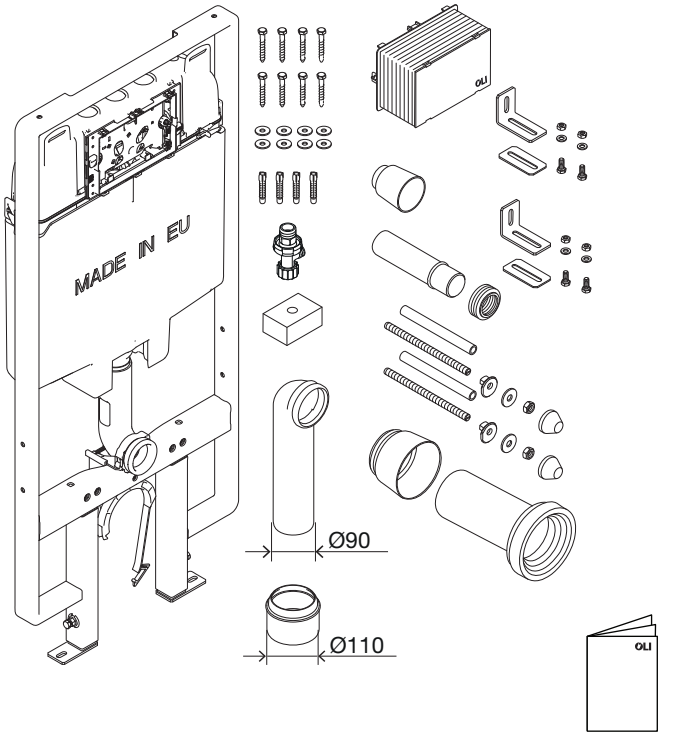

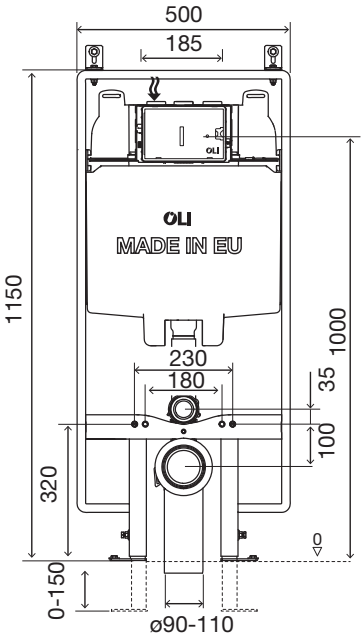

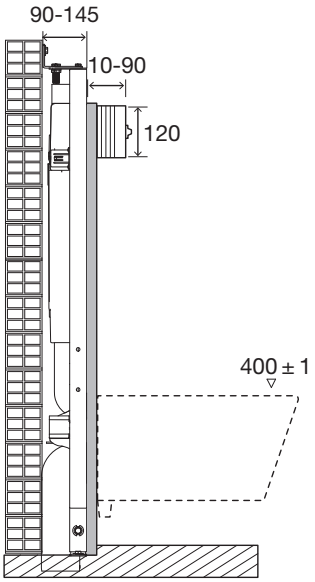

(dimensions in milimetres)

1

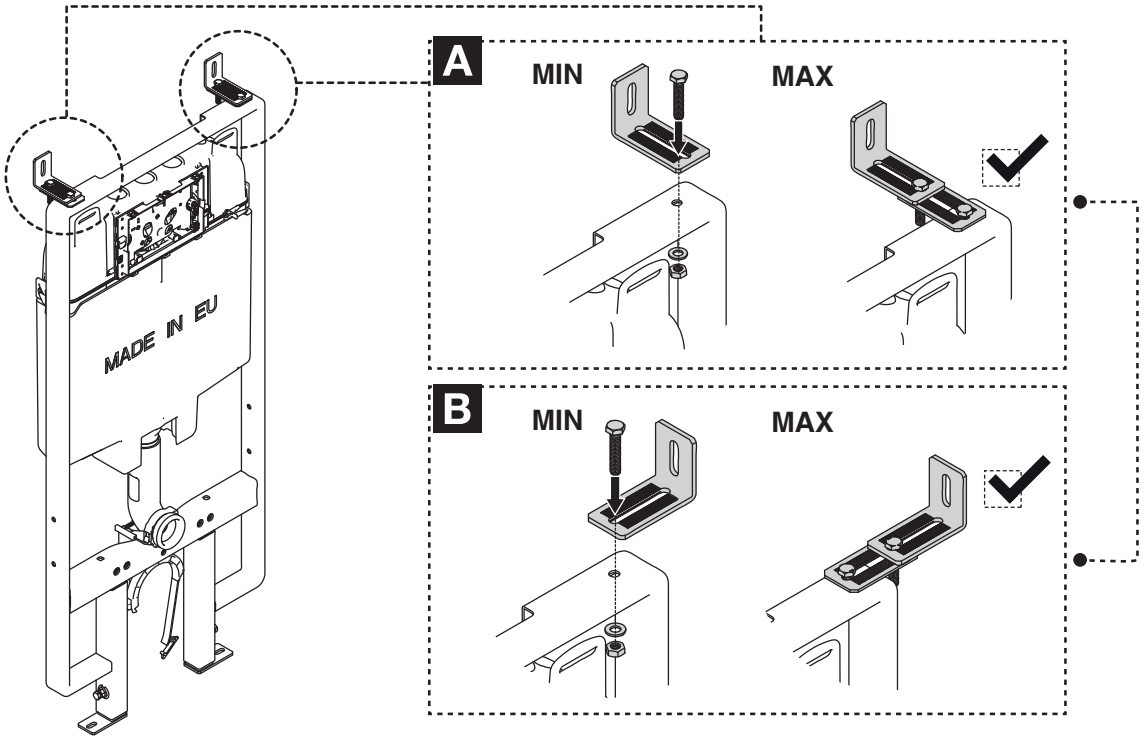

MIN	90
MAX	145

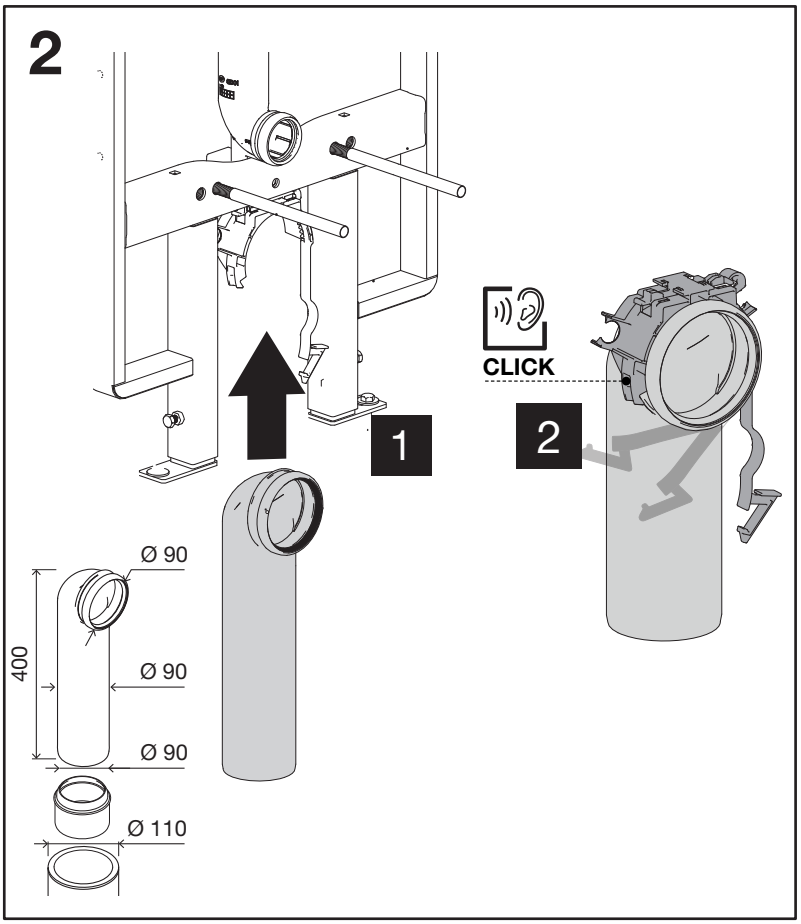
2
1
CLICK
2
Ø 90
Ø 90
Ø 90
Ø 110
400

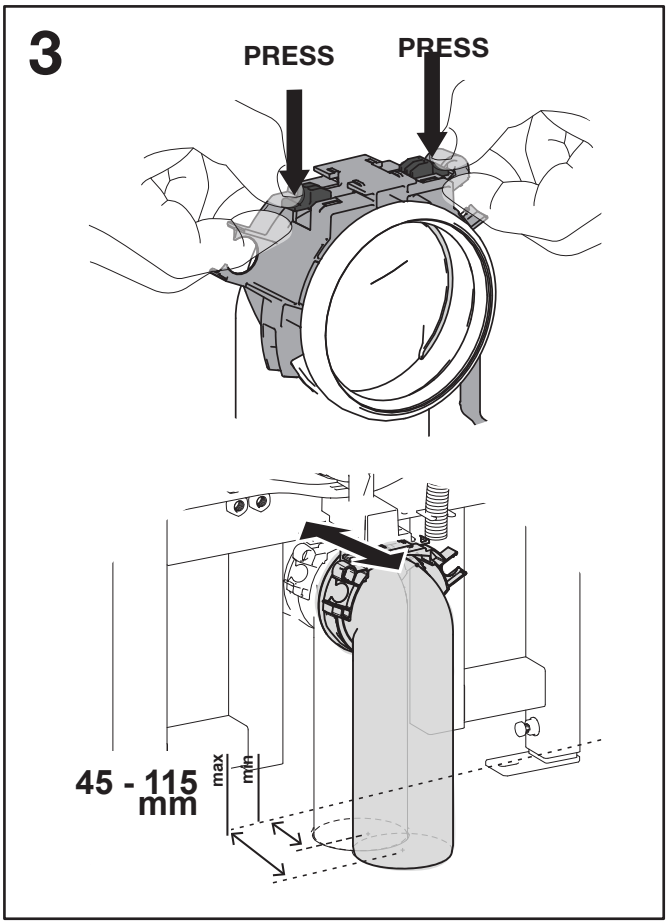
3
PRESS
PRESS
45 - 115
mm
max
min

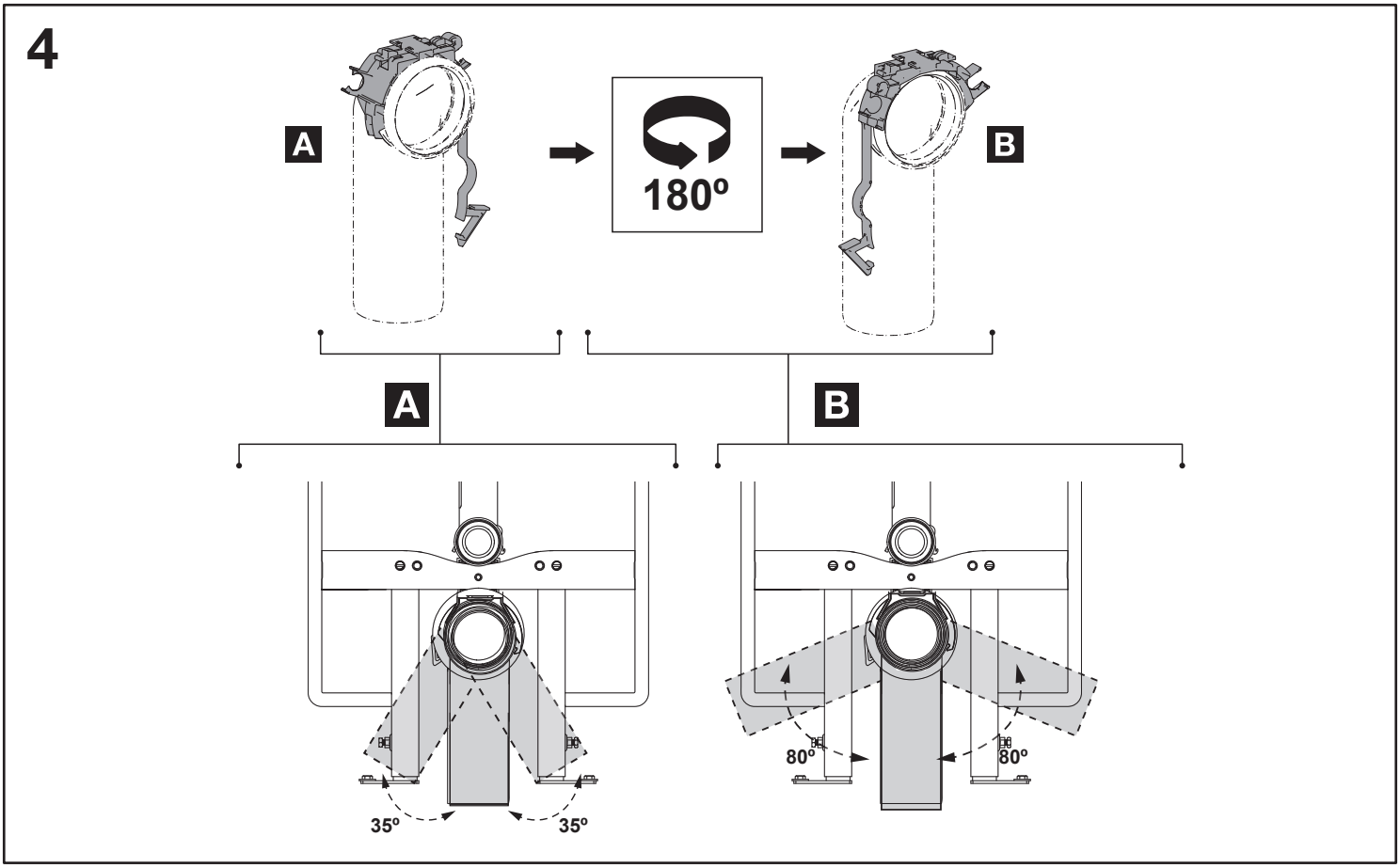
4
A
180º
B
A
B
35º
35º
80º
80º

2

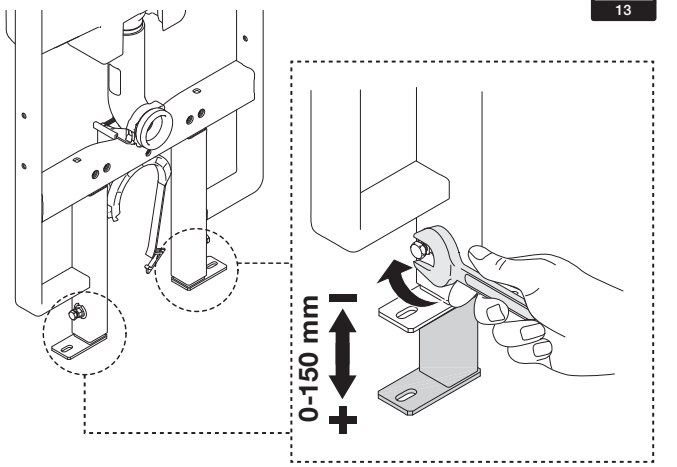

4

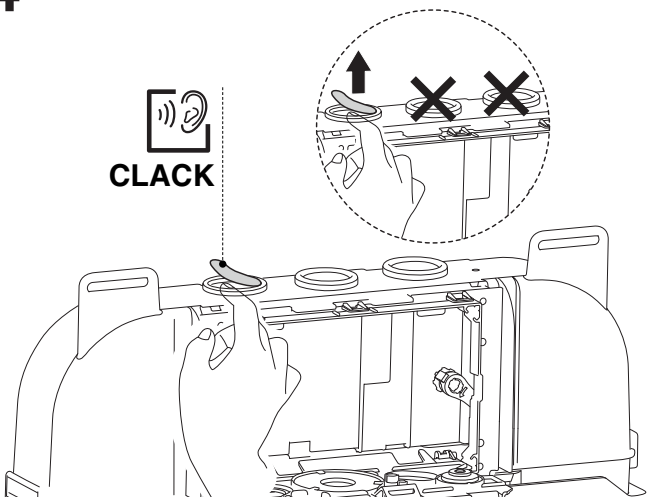

6

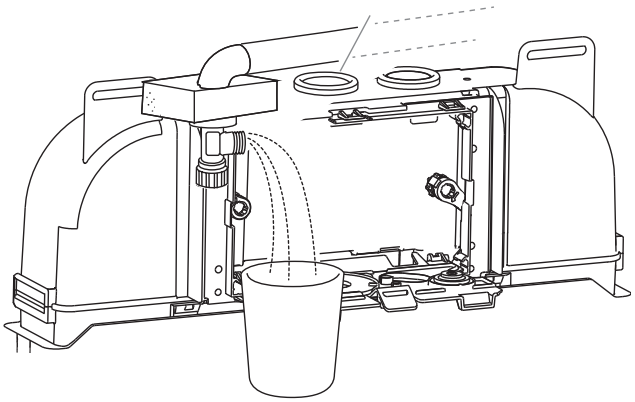

5

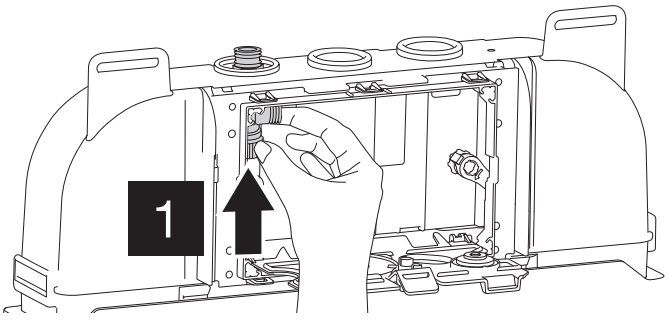

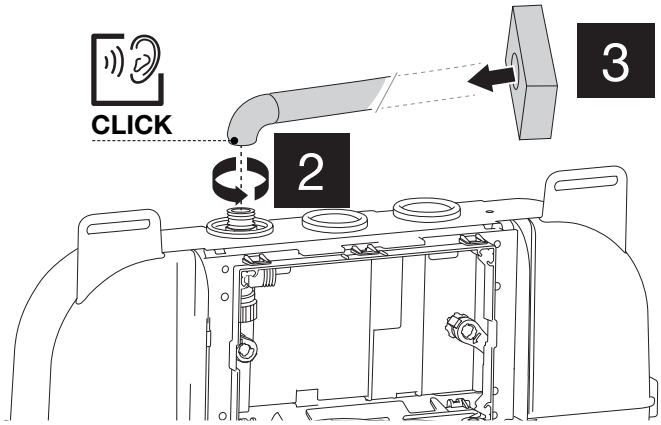

7

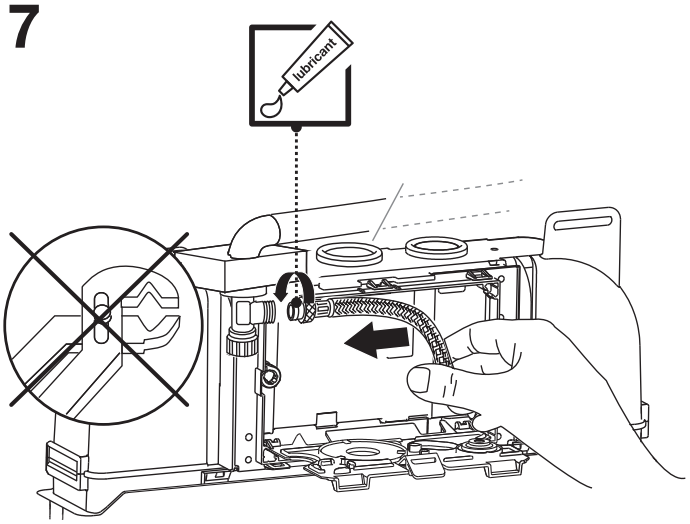

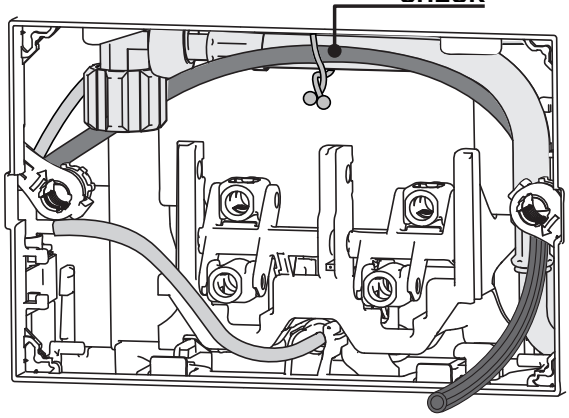

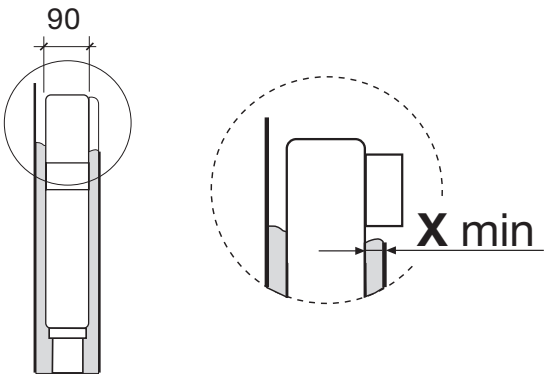

8

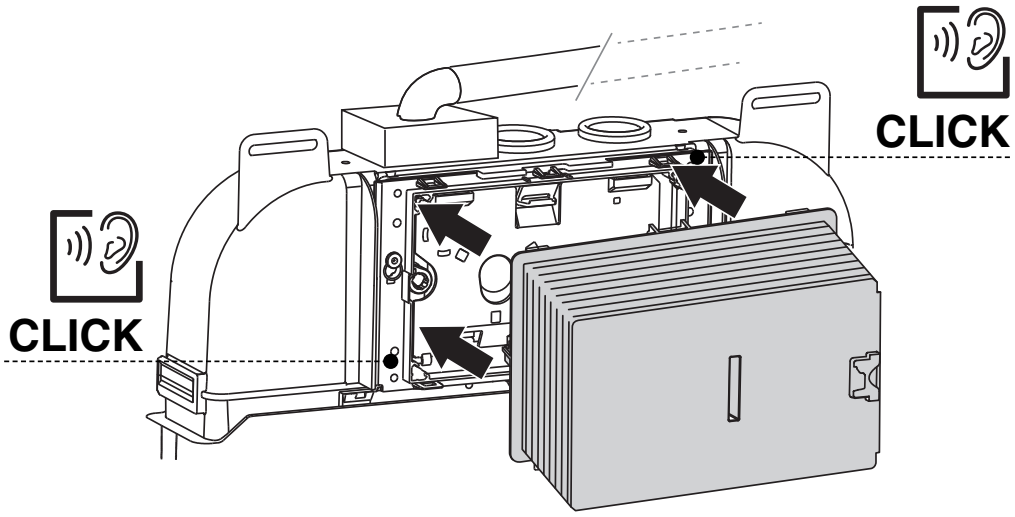

9

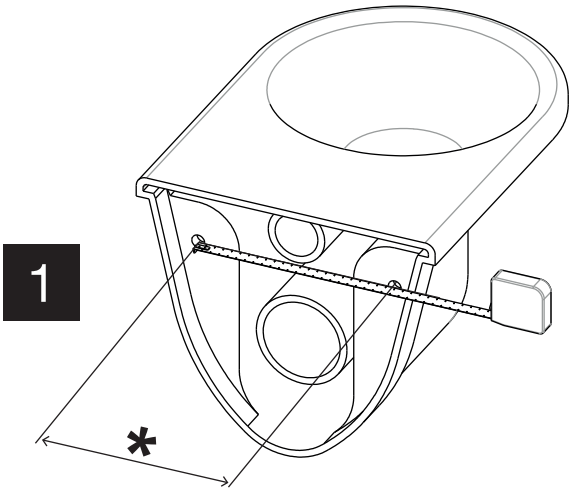

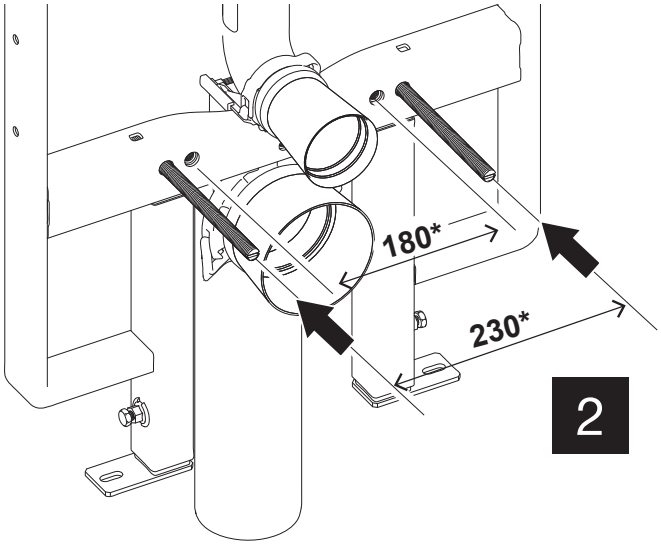

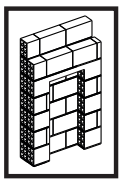

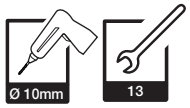
Ø 10mm
13

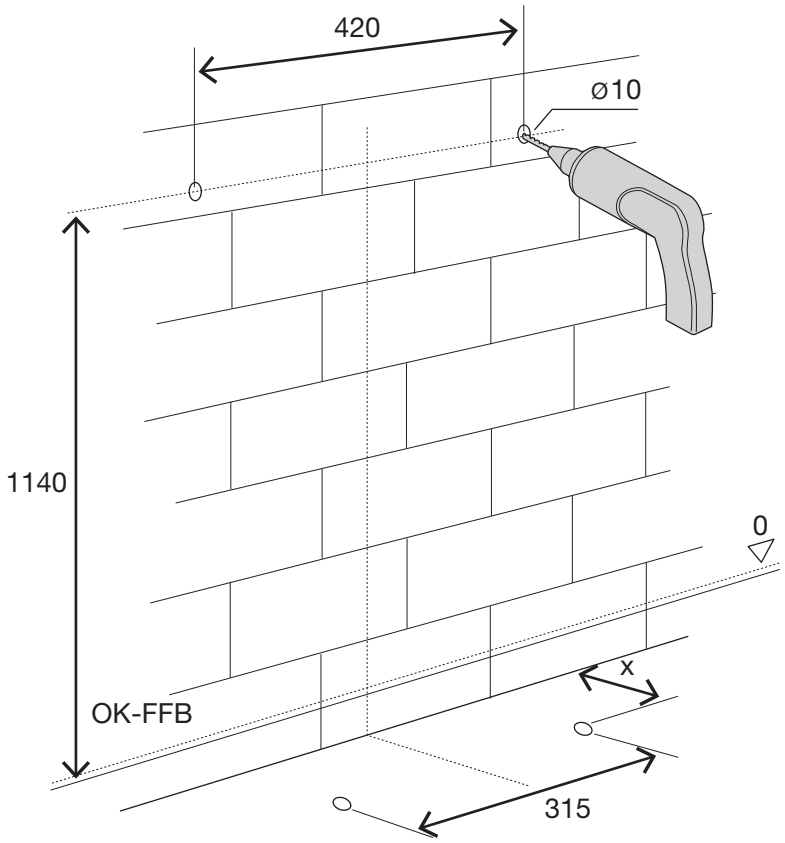
420
ø10
1140
0
x
OK-FFB
315

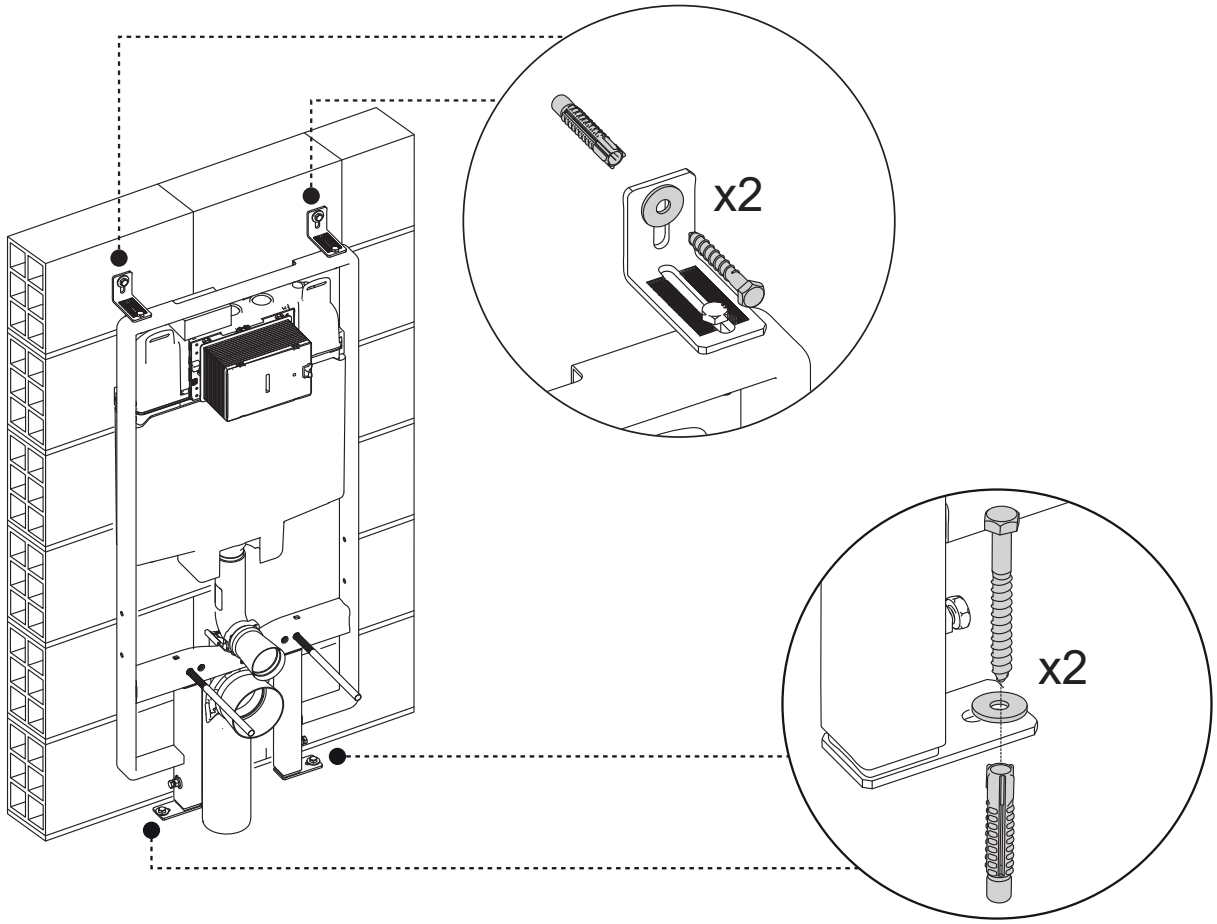
x2
x2

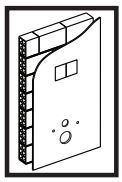

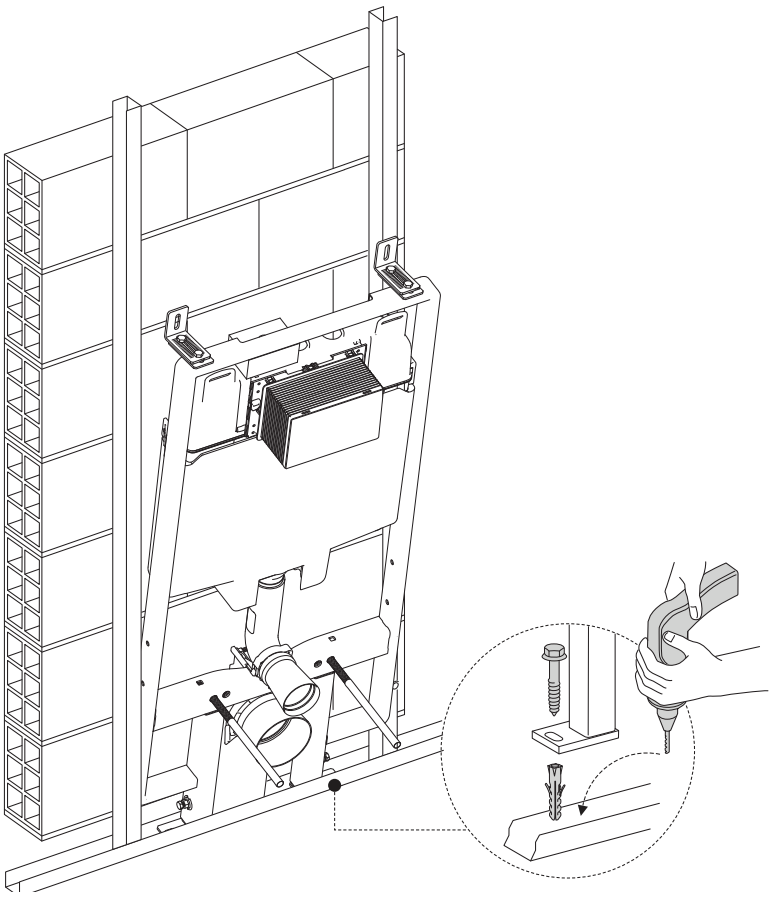

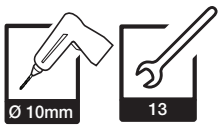
Ø 10mm
13

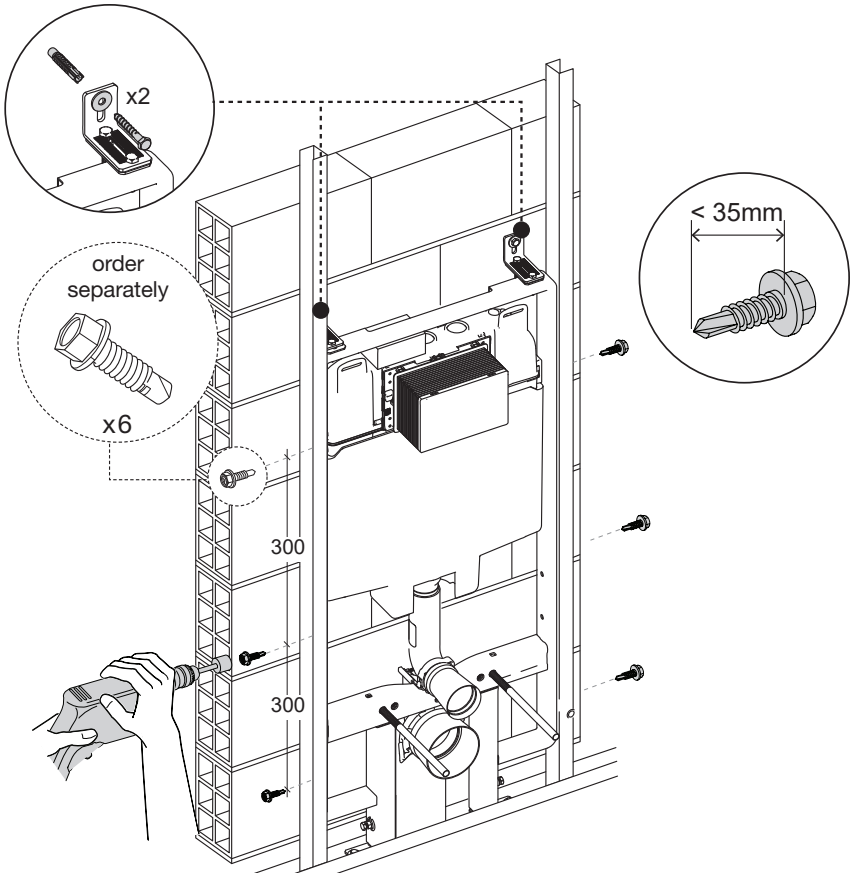
x2
order
separately
x6
< 35mm
300
300

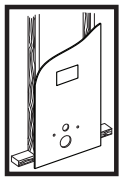

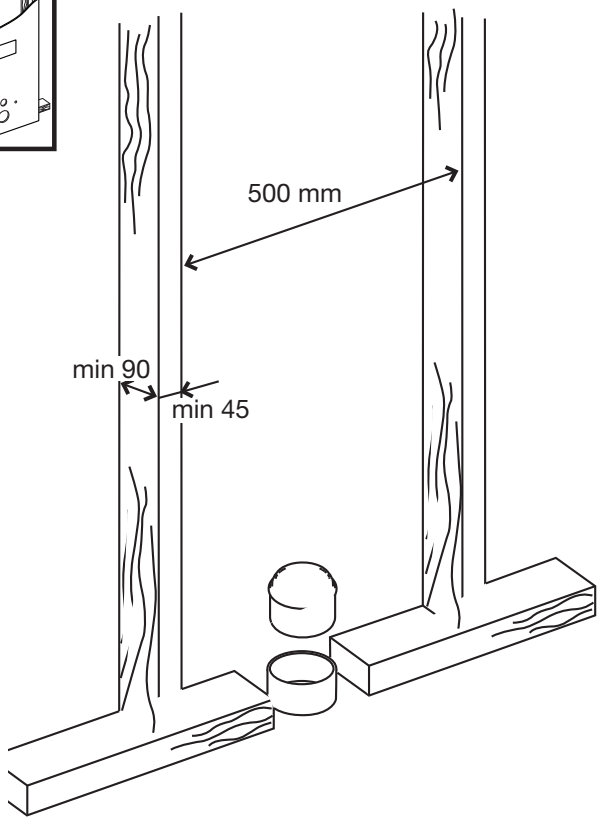
500 mm
min 90
min 45

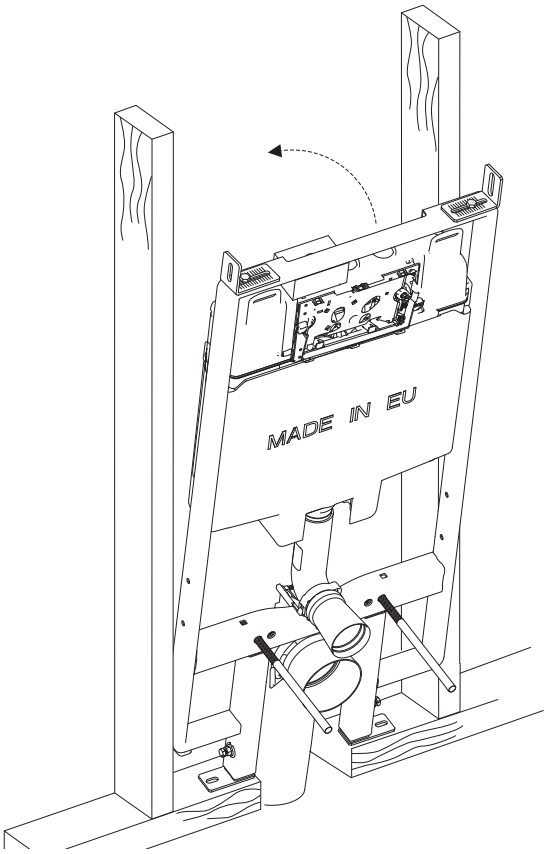
MADE IN EU

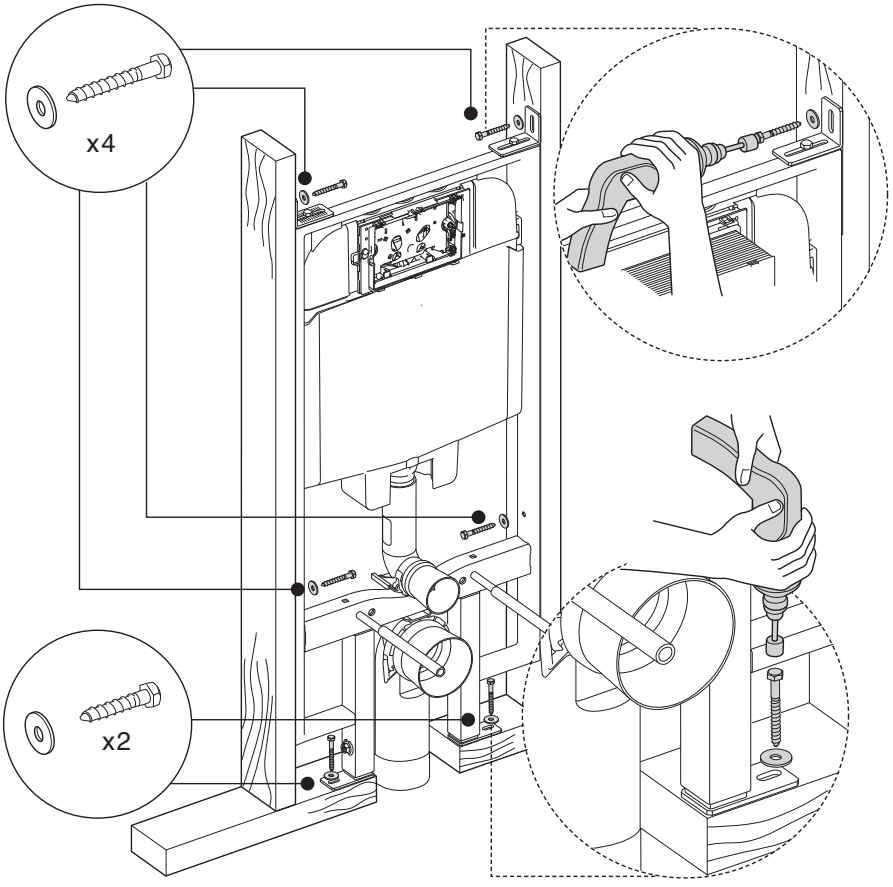
x4
x2

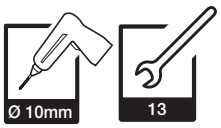
Ø 10mm
13

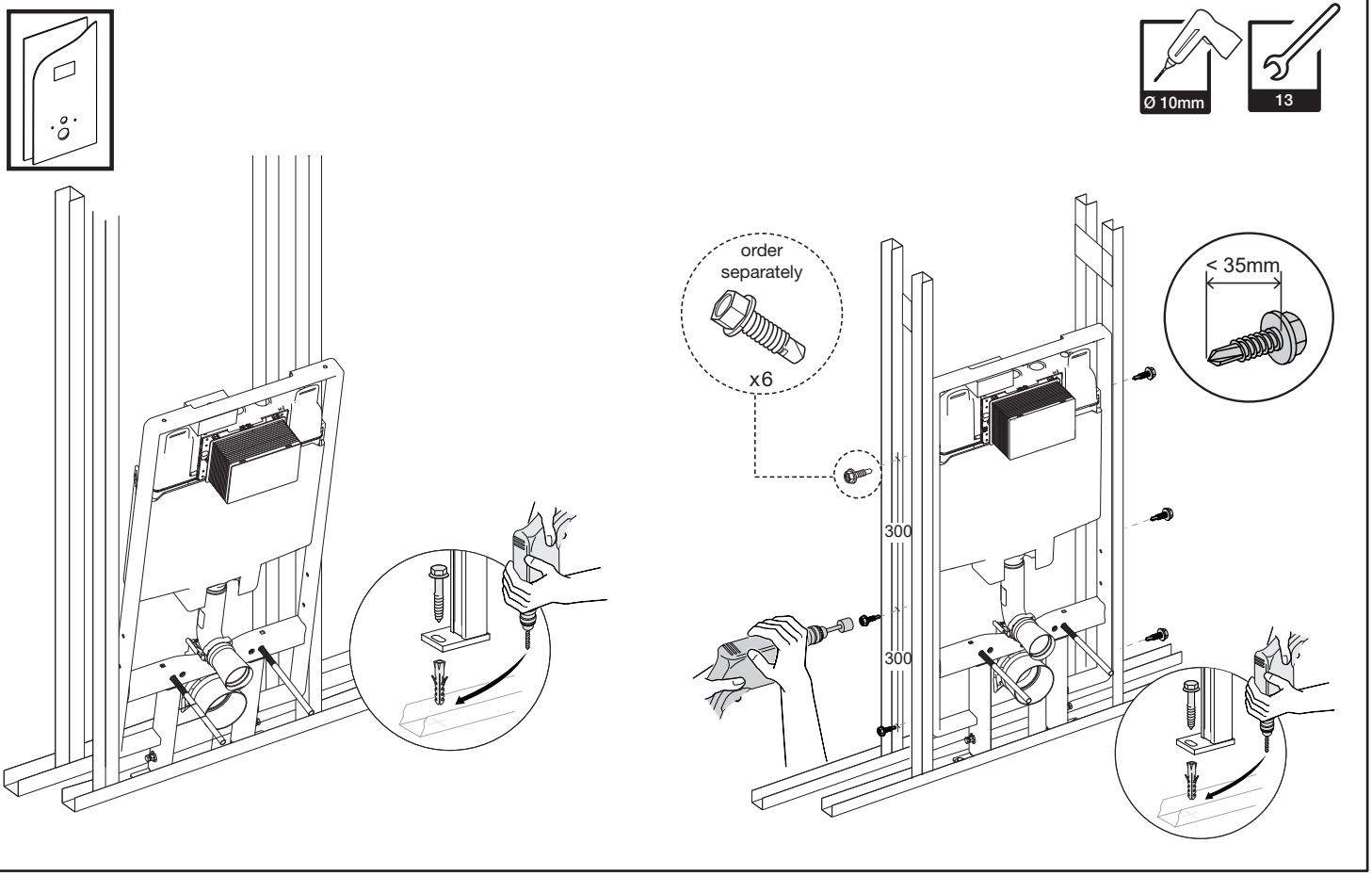

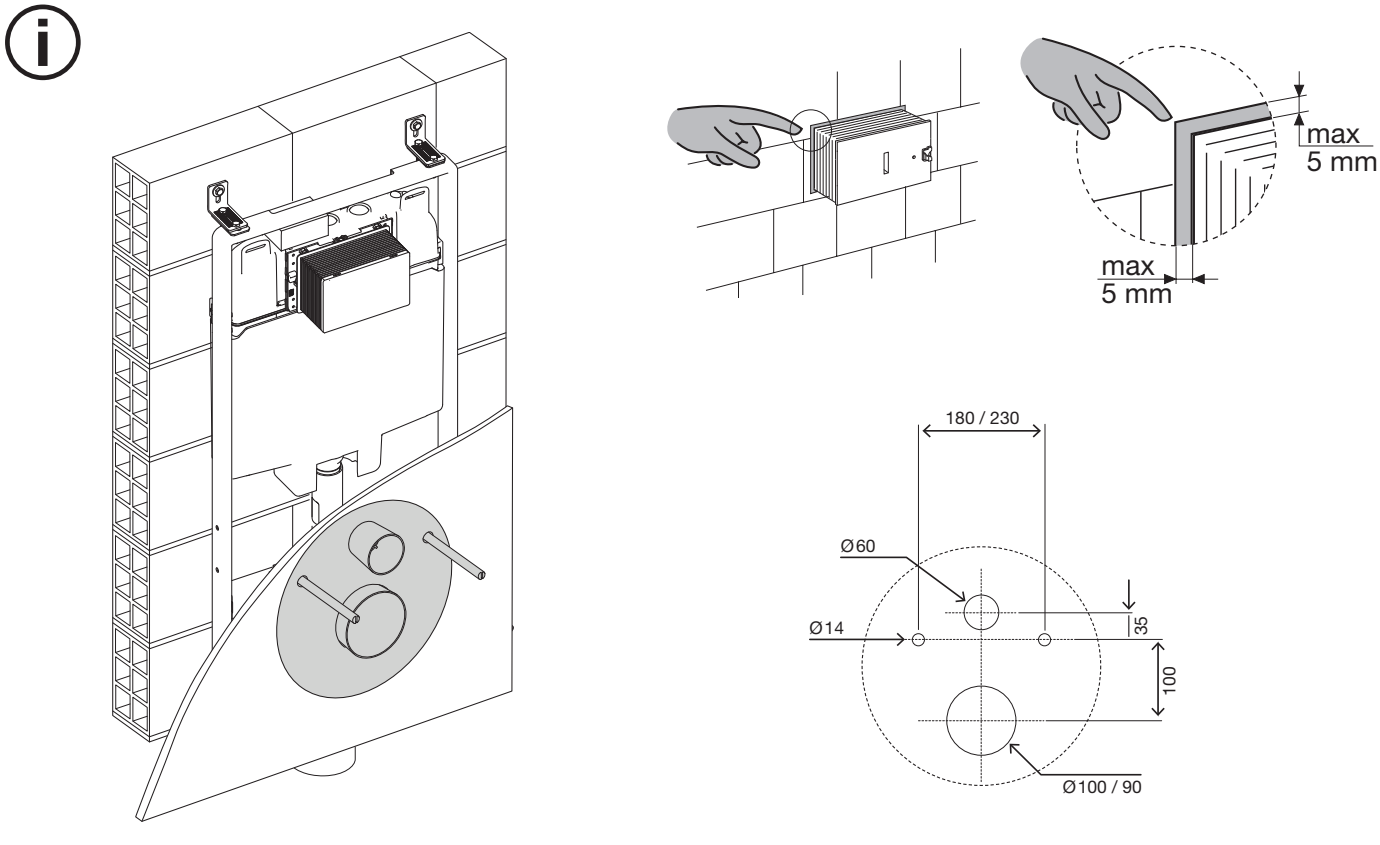

www.oli-world.com
comercial@oli-world.com | info@olisrl.it