OLI74 PLUS S90 | AC

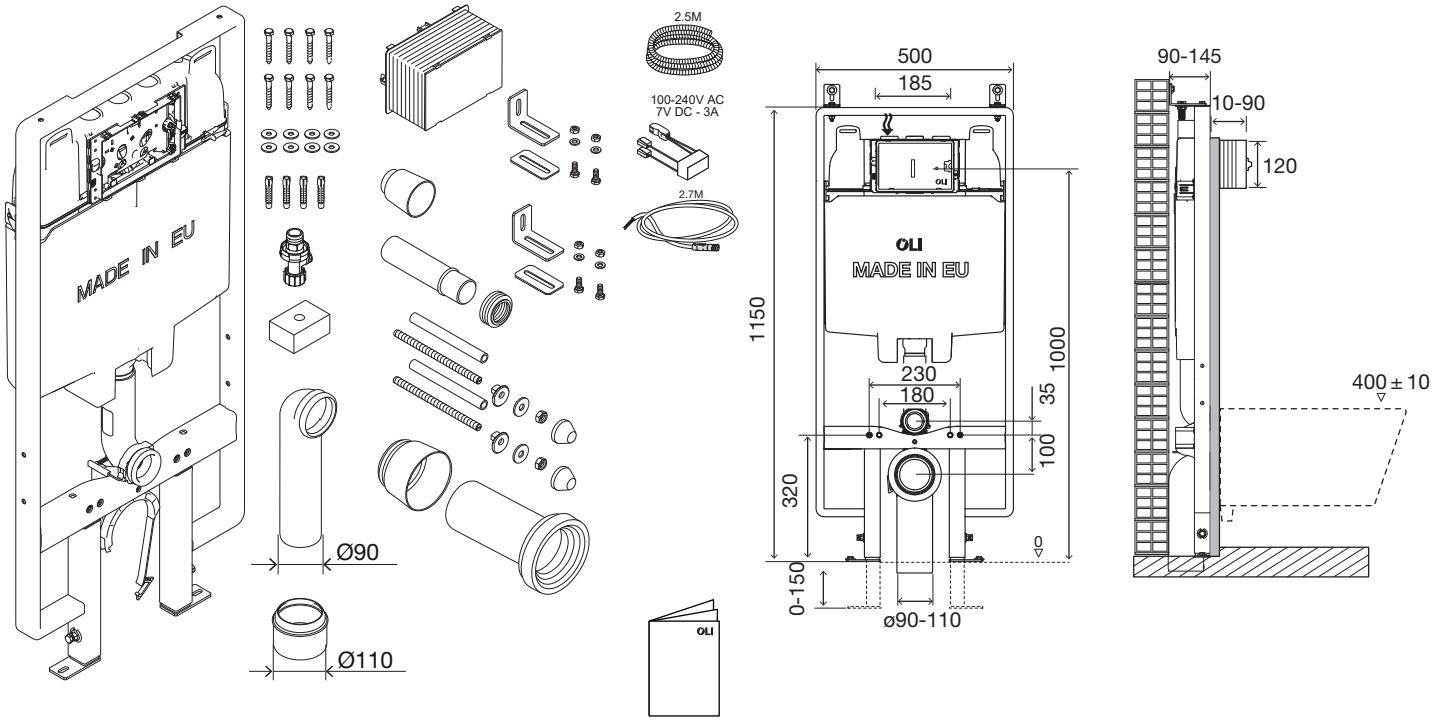

(dimensions in milimetres)

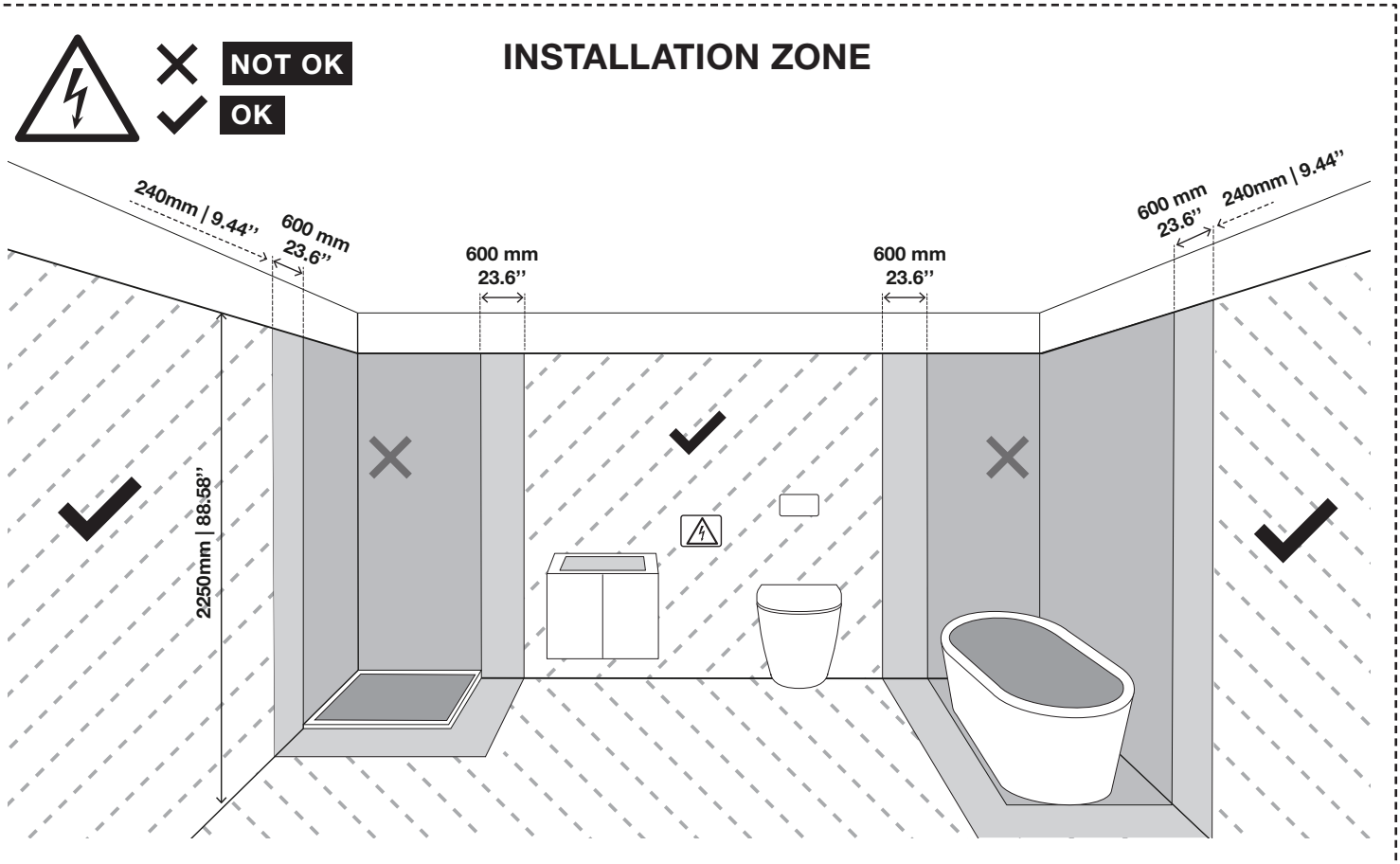

www.oli-world.com

comercial@oli-world.com | info@olisrl.it

AC10000888325.2

1

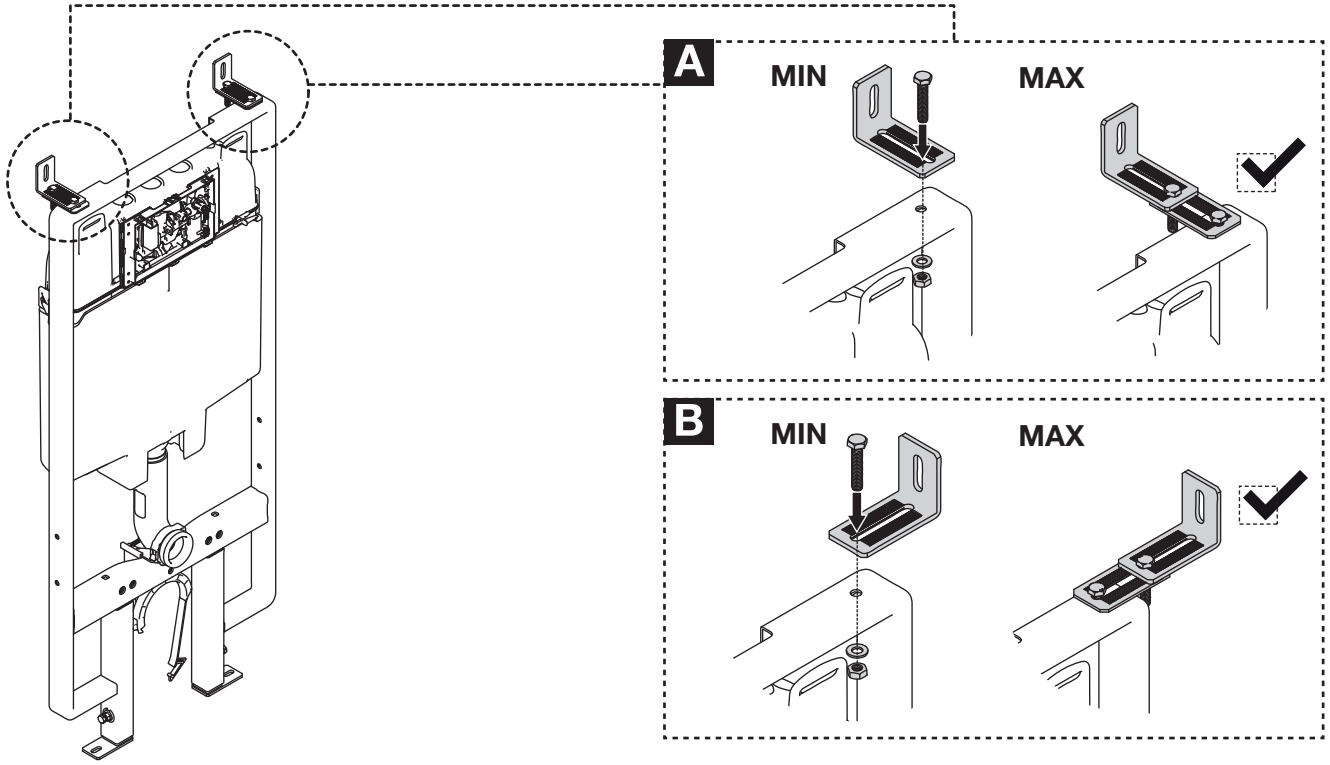
A
MIN
MAX
B
MIN
MAX

2

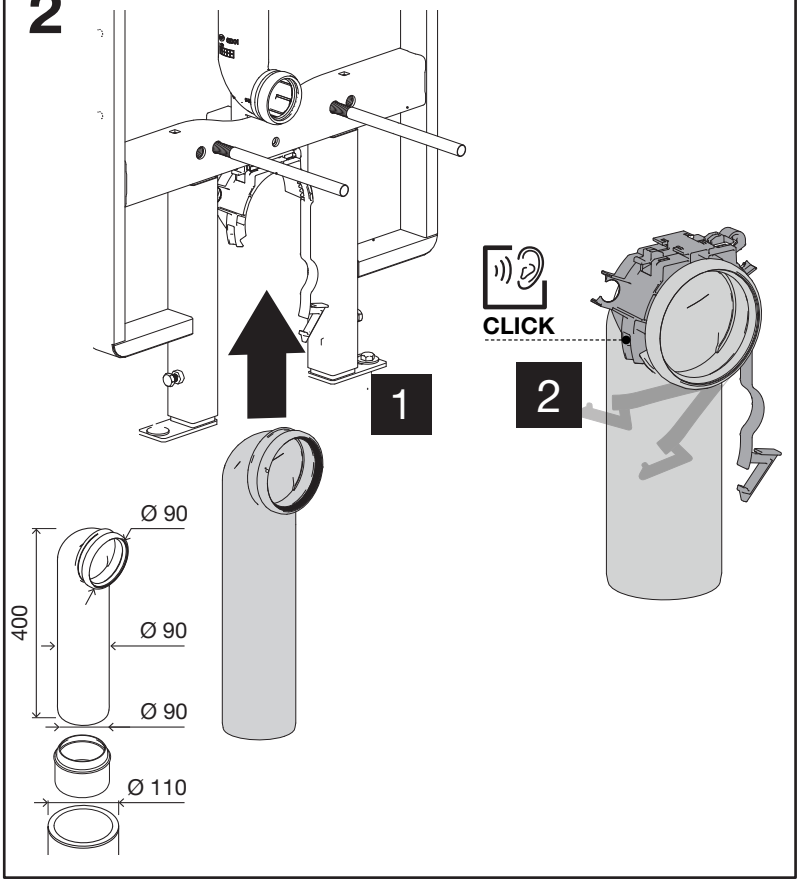
1
CLICK
2
Ø 90
Ø 90
Ø 90
400
Ø 110

3

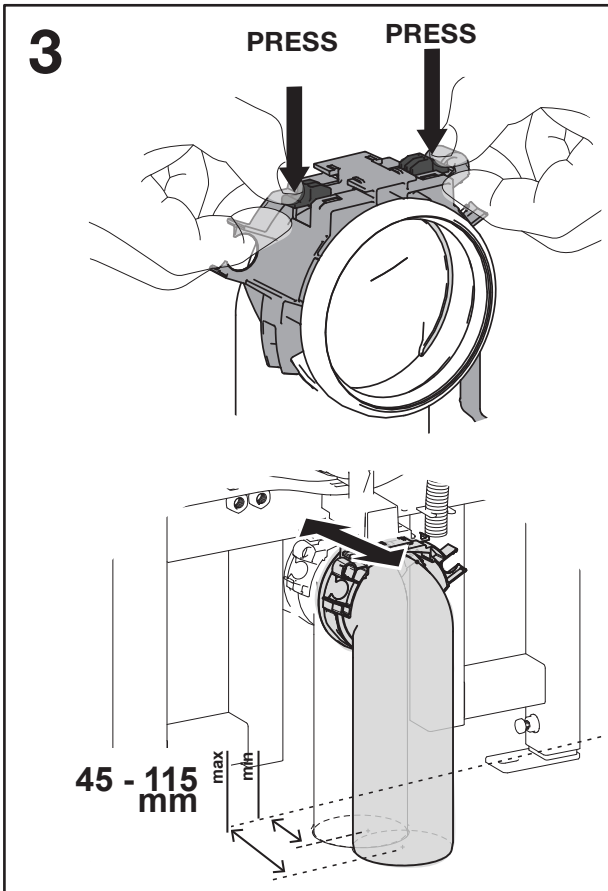
PRESS
PRESS
45 - 115
mm
max
min

4

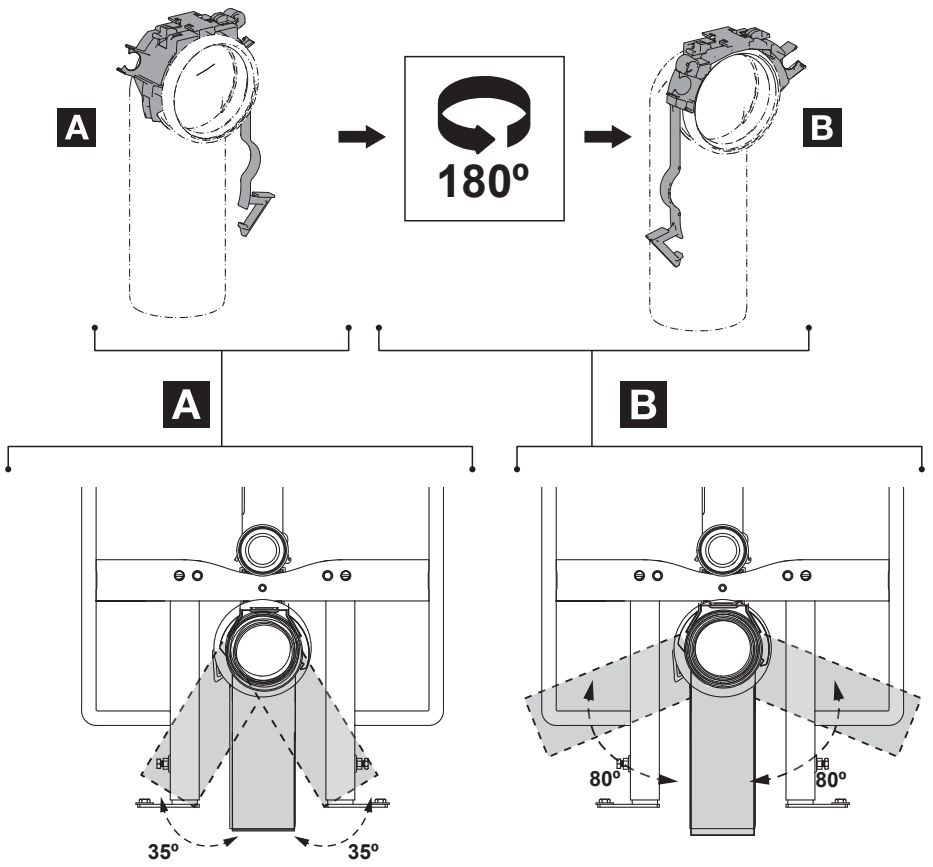

5

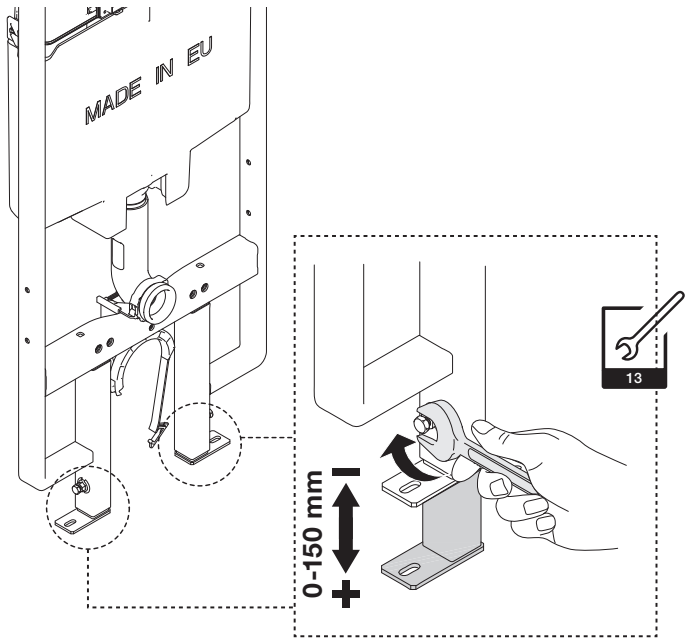

6

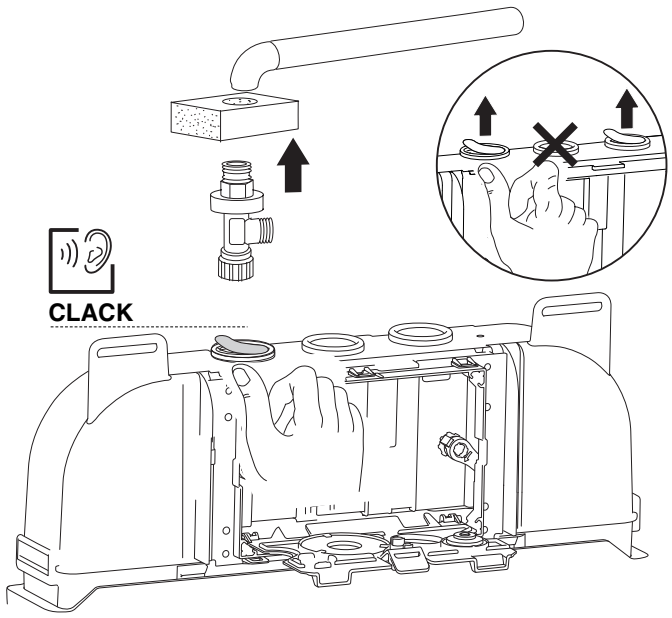

7

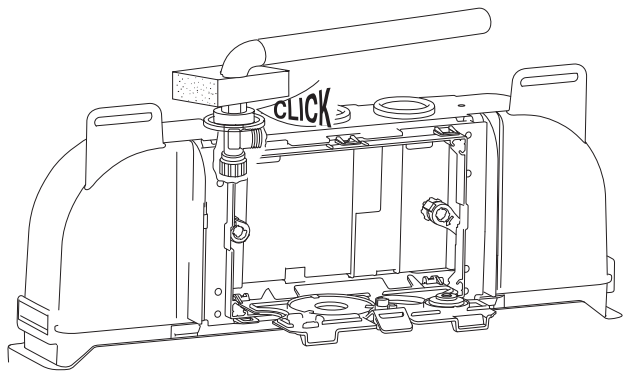

8

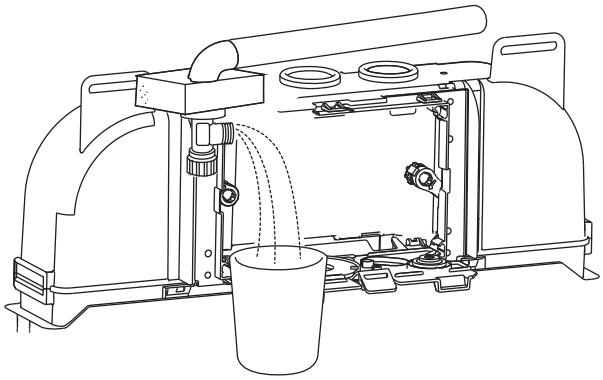

9

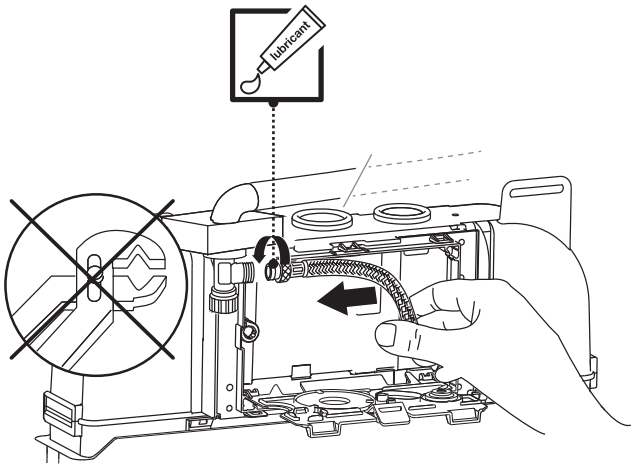

10

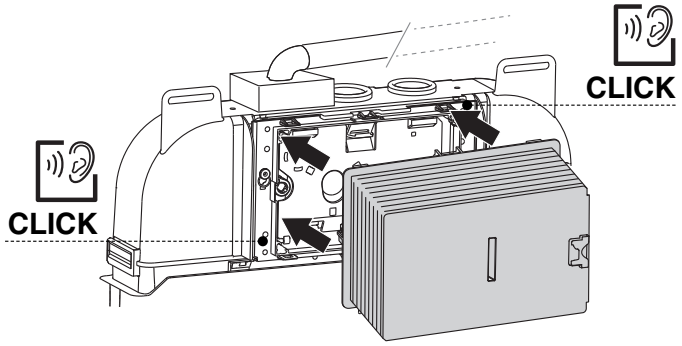

11

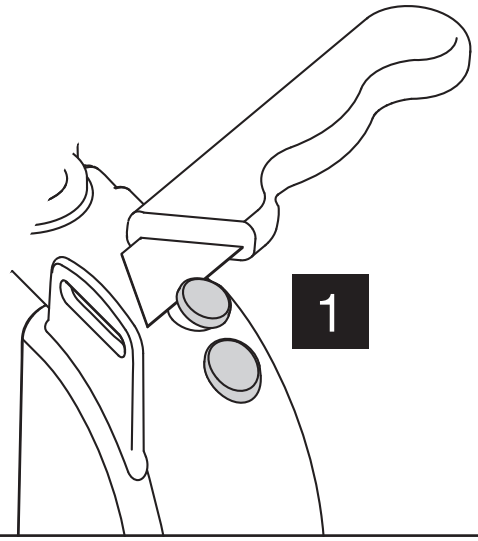

12

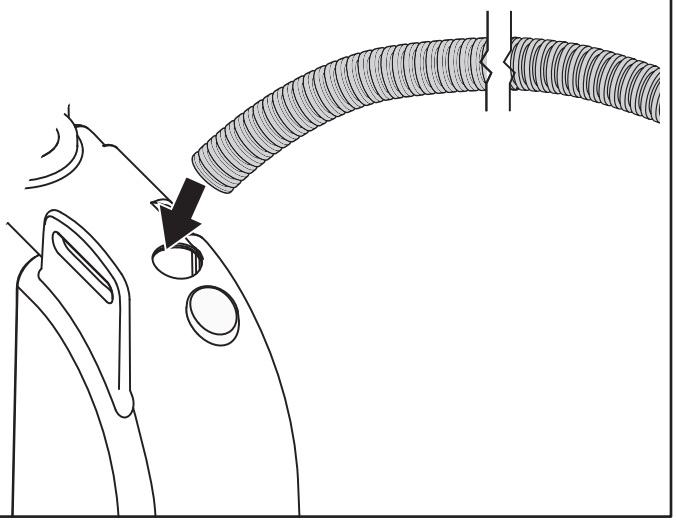

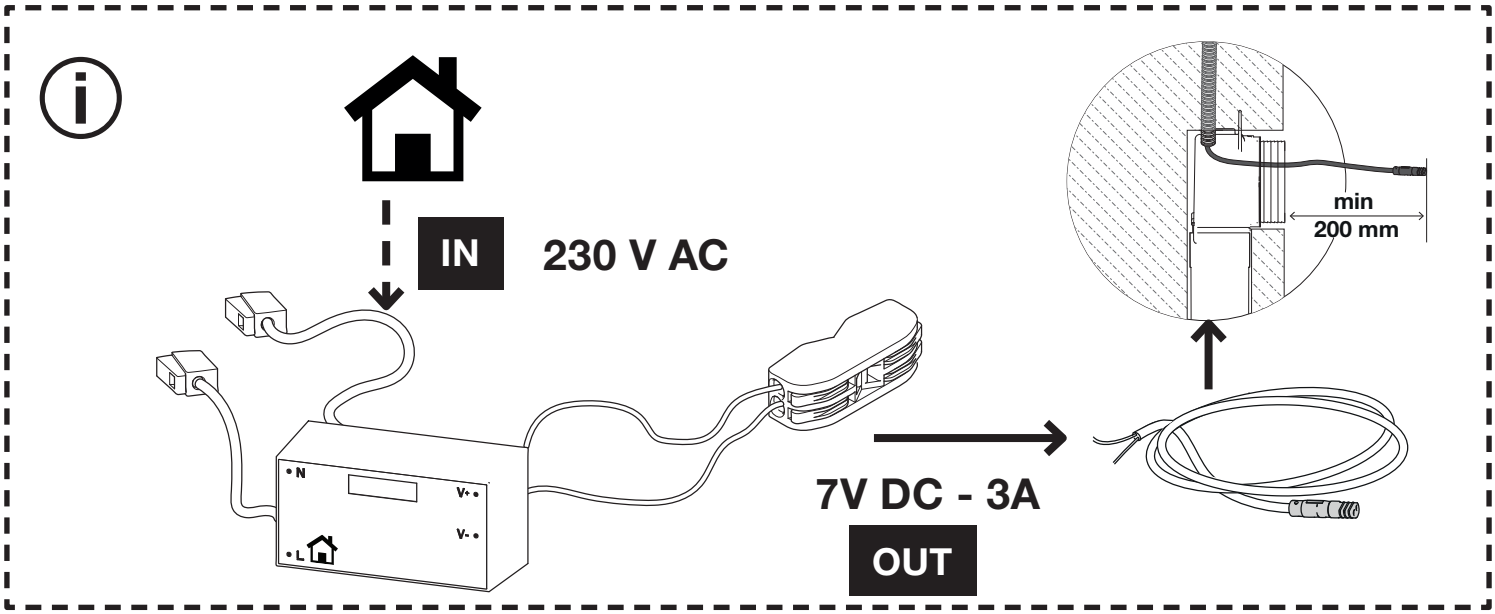
IN
230 V AC
min
200 mm
7V DC - 3A
OUT

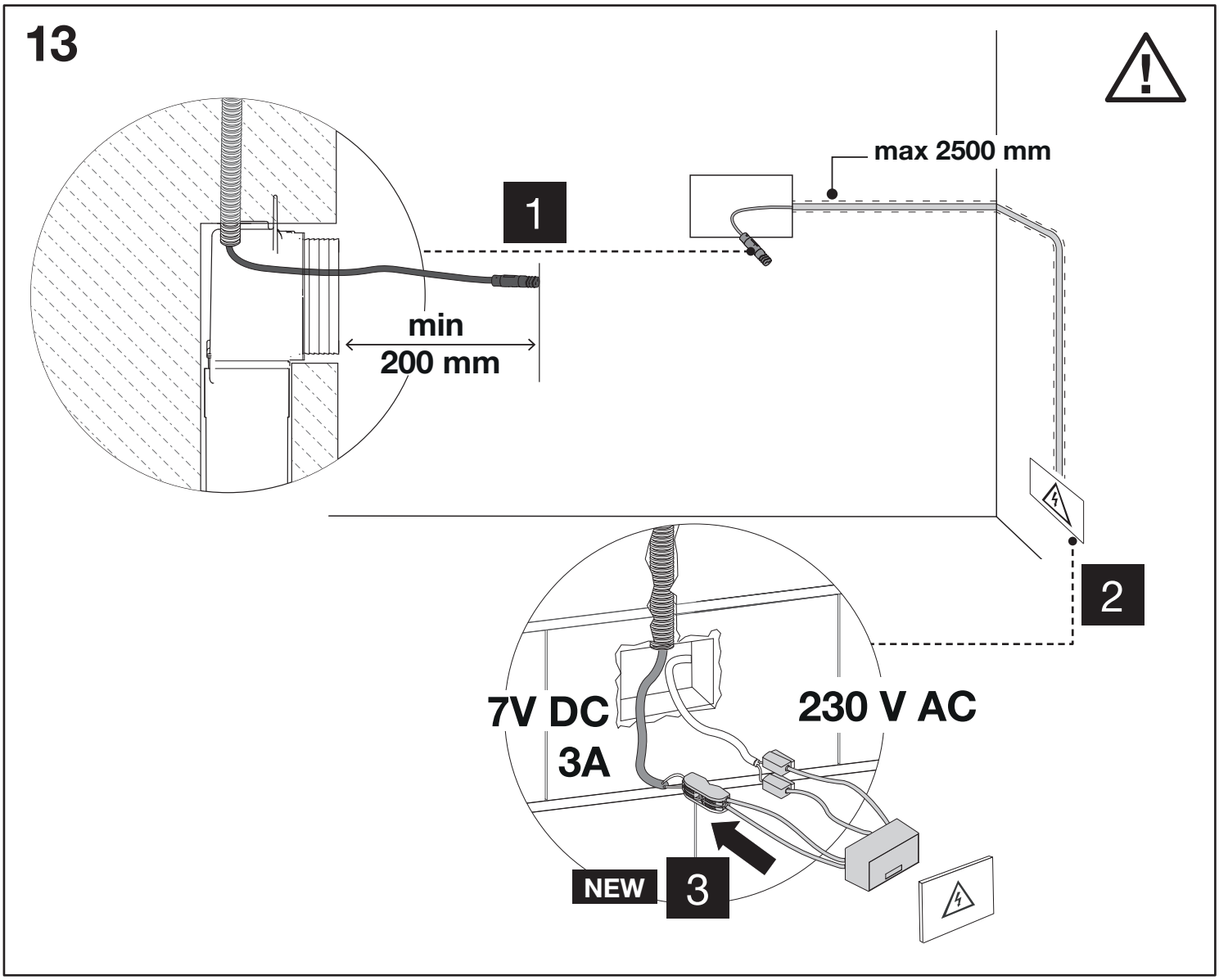
13
max 2500 mm
1
min
200 mm
2
7V DC
3A
230 V AC
NEW
3

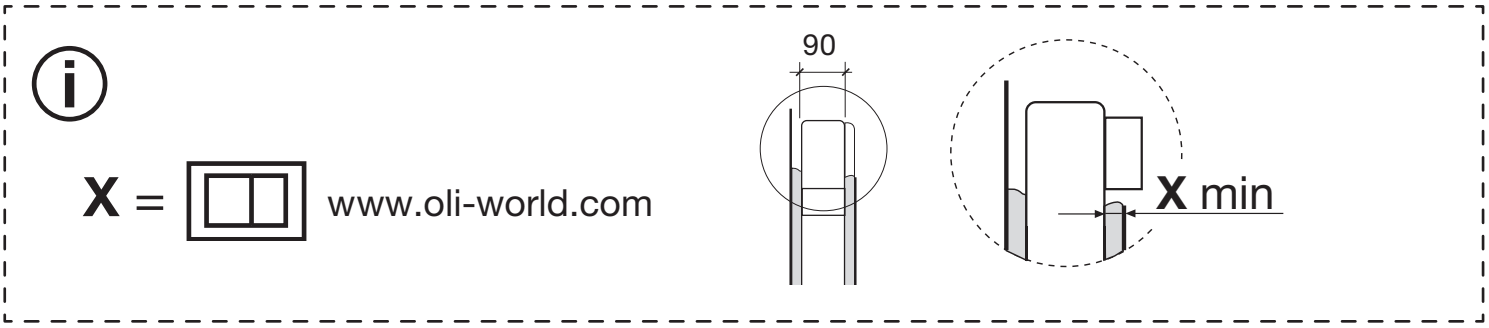
X =
www.oli-world.com
90
X min

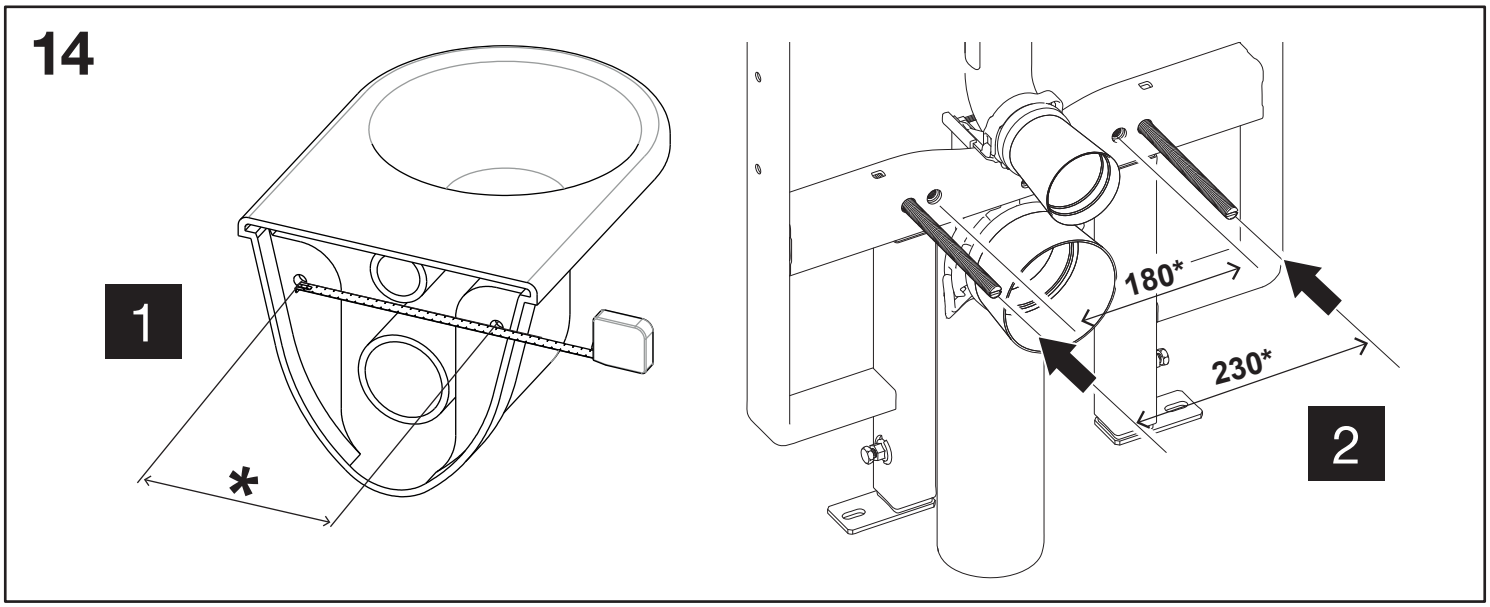
14
1
*
180*
230*
2

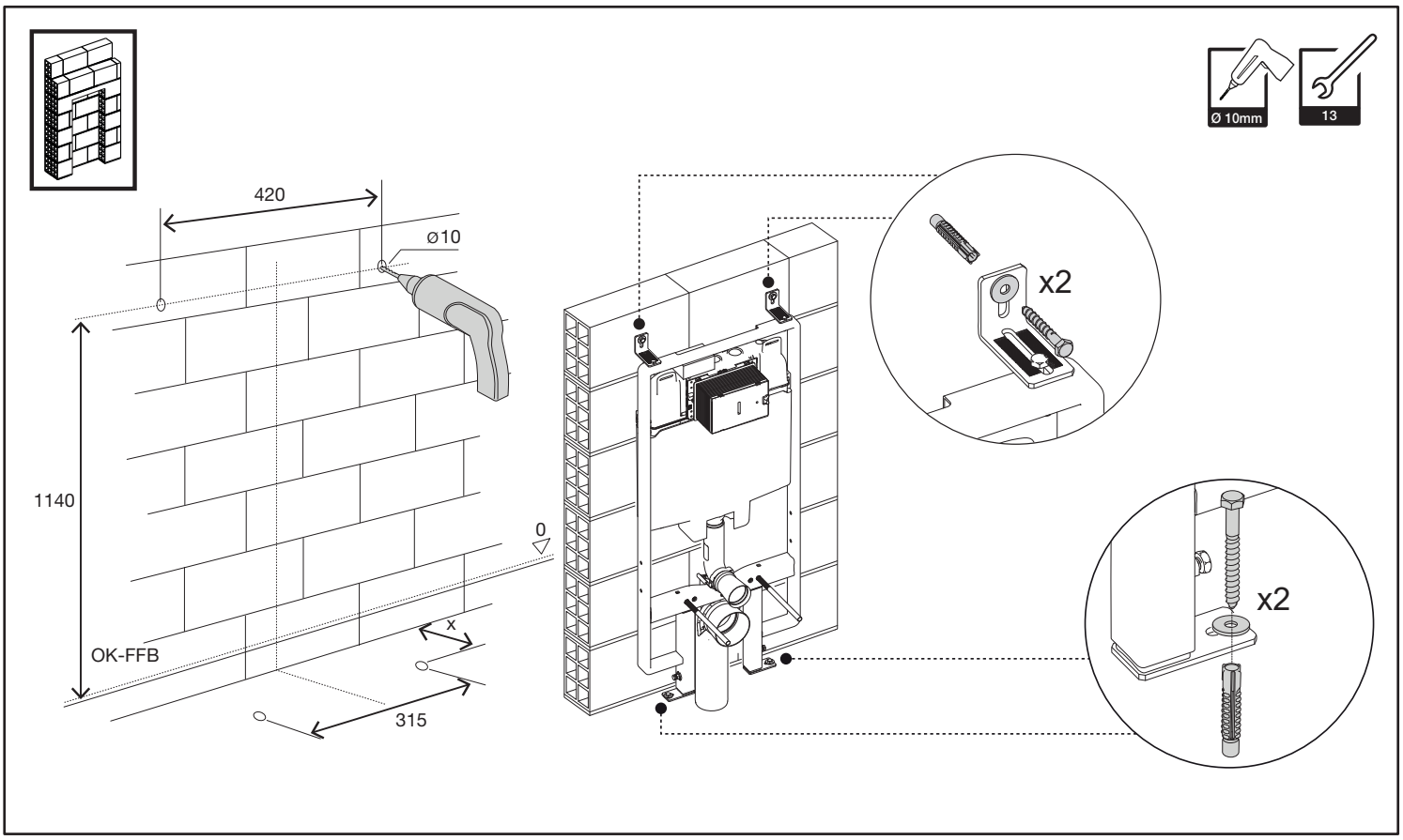
Ø 10mm
13
420
ø10
1140
0
x
OK-FFB
315
x2
x2

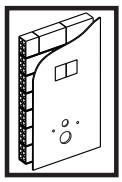

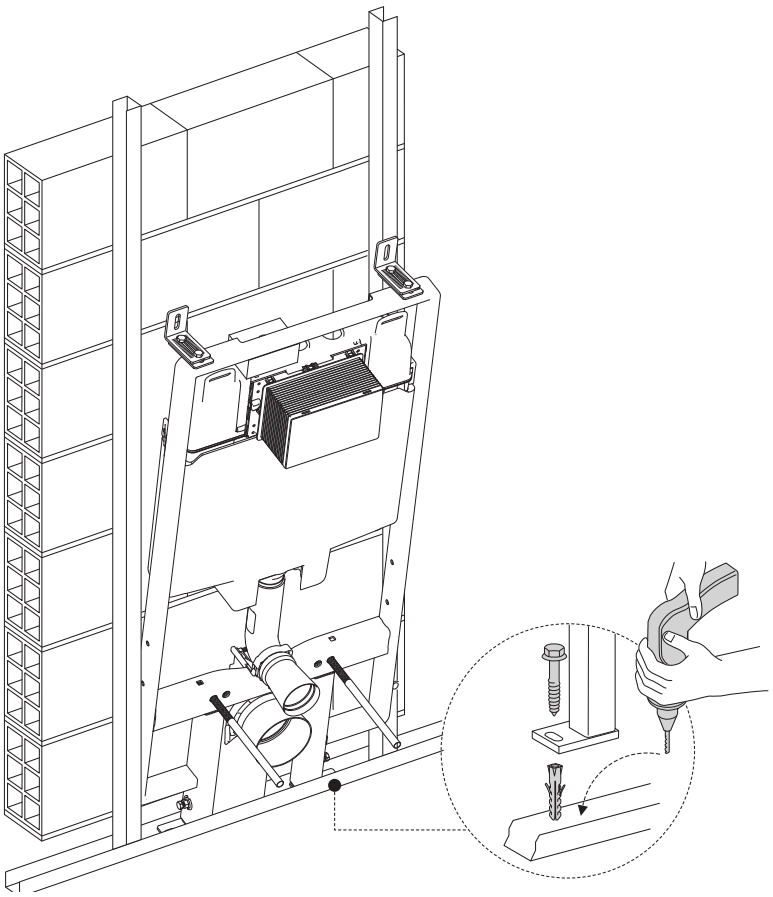

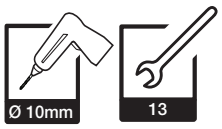
Ø 10mm
13

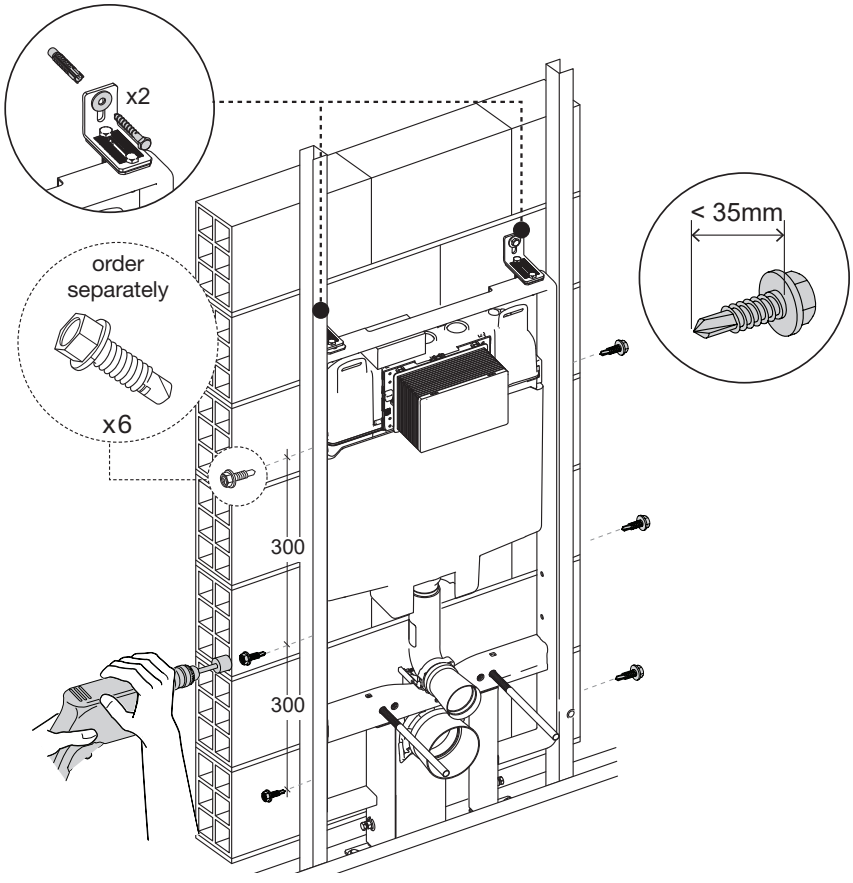
x2
order
separately
x6
< 35mm
300
300

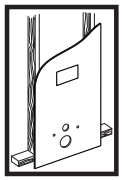

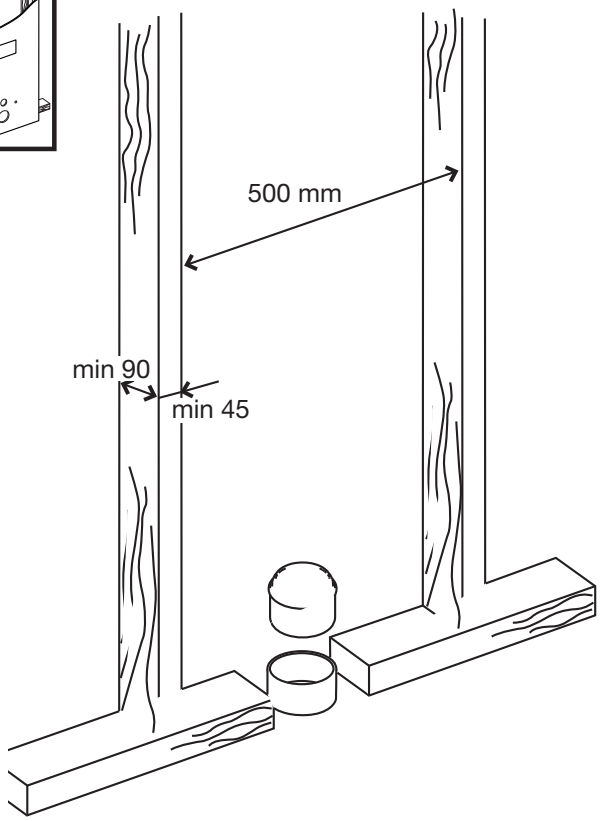
500 mm
min 90
min 45

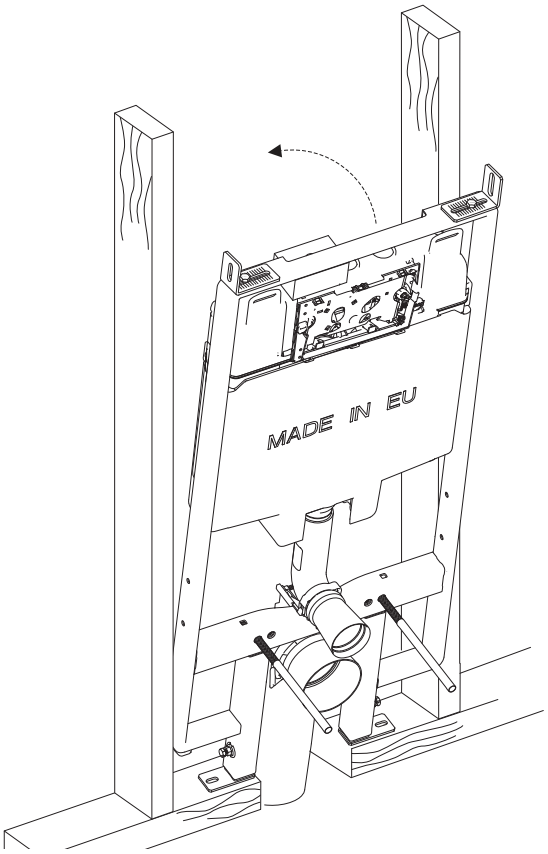
MADE IN EU

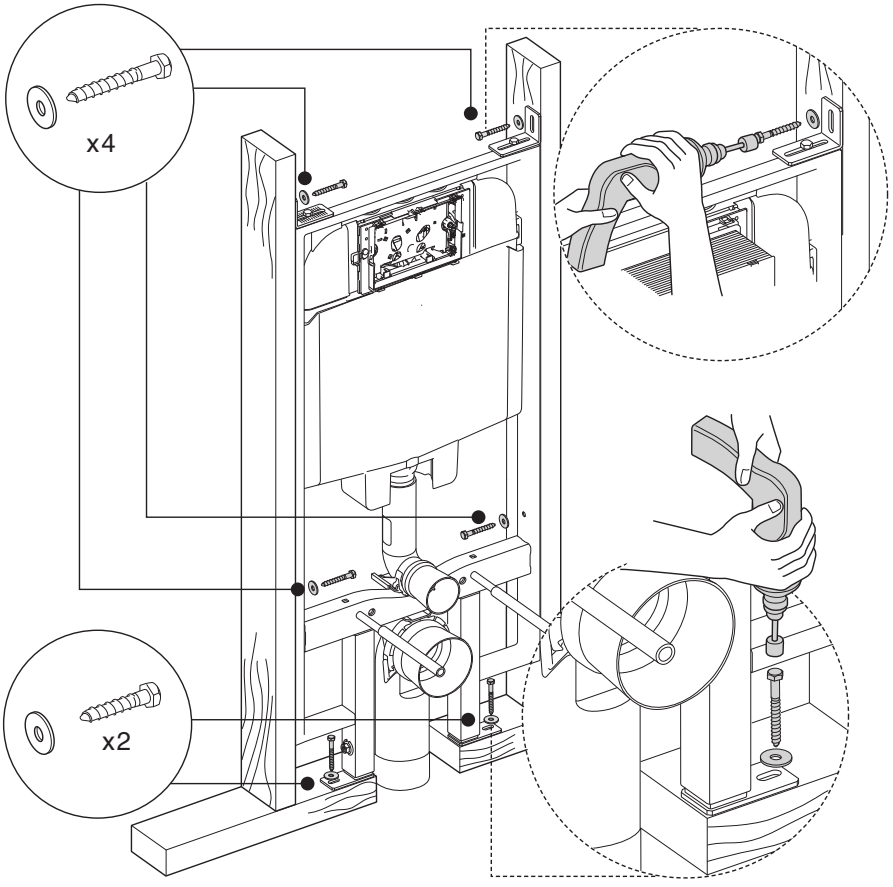
x4
x2

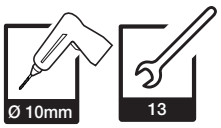
Ø 10mm
13

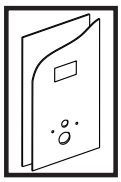

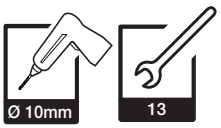
Ø 10mm
13

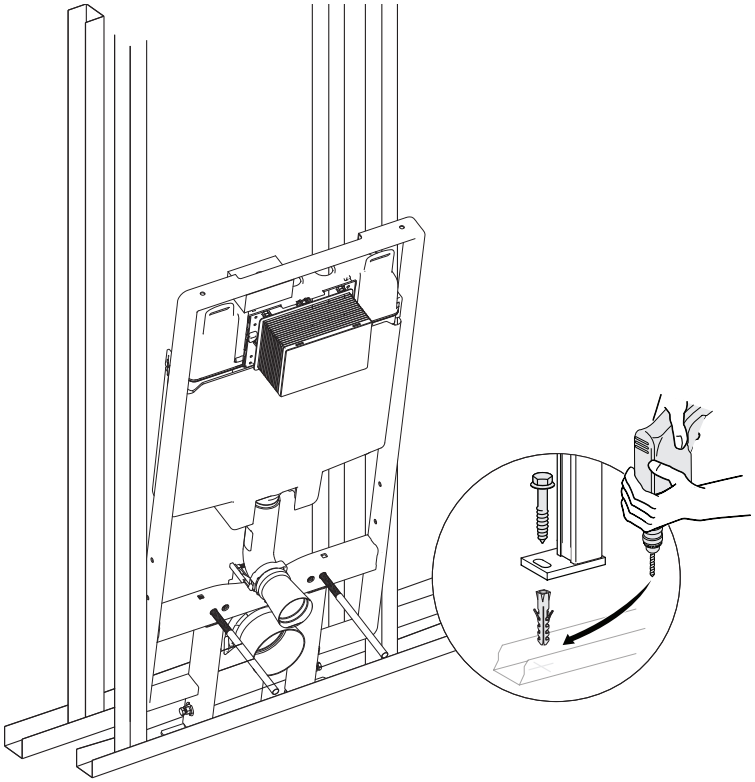

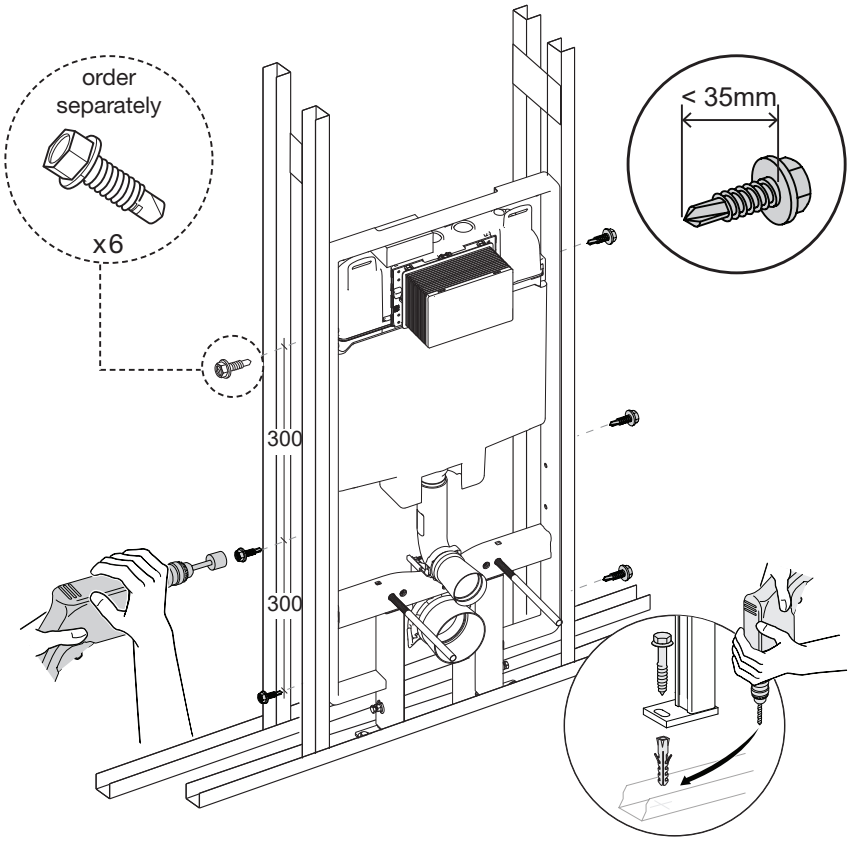
order
separately
x6
< 35mm
300
300

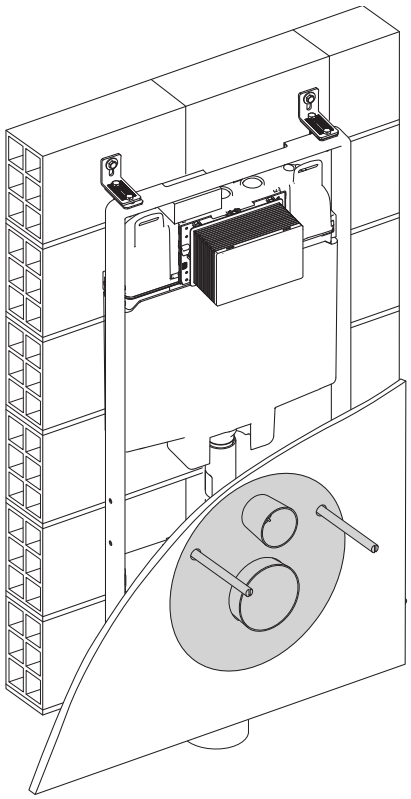

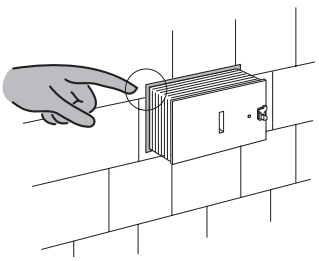

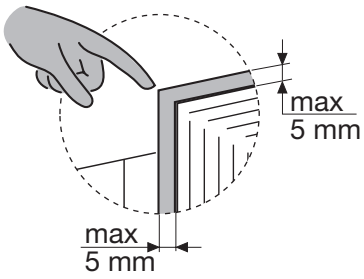
max
5 mm
max
5 mm

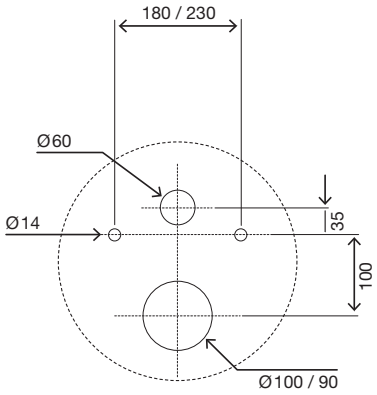
180 / 230
Ø60
Ø14
35
100
Ø100 / 90

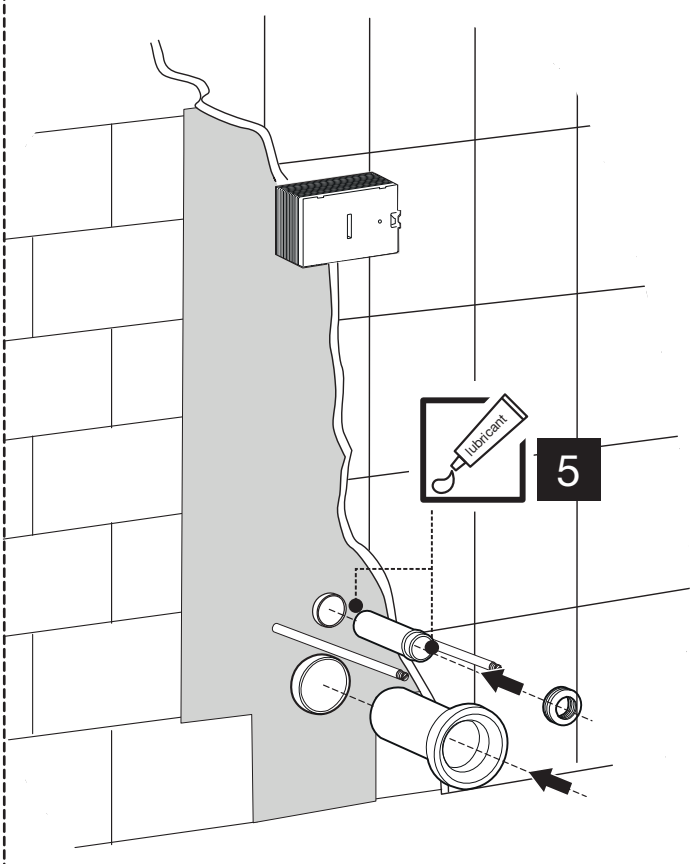
lubricant
5

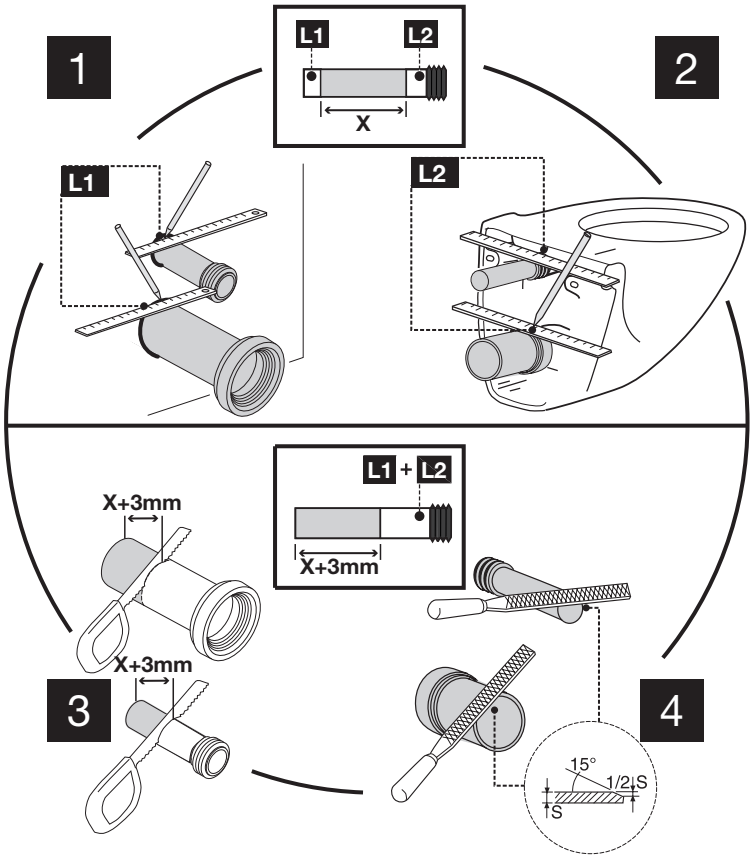
1
L1
L2
X
2
L1
L2
L1 + L2
X+3mm
X+3mm
3
4
15°
1/2 S
S

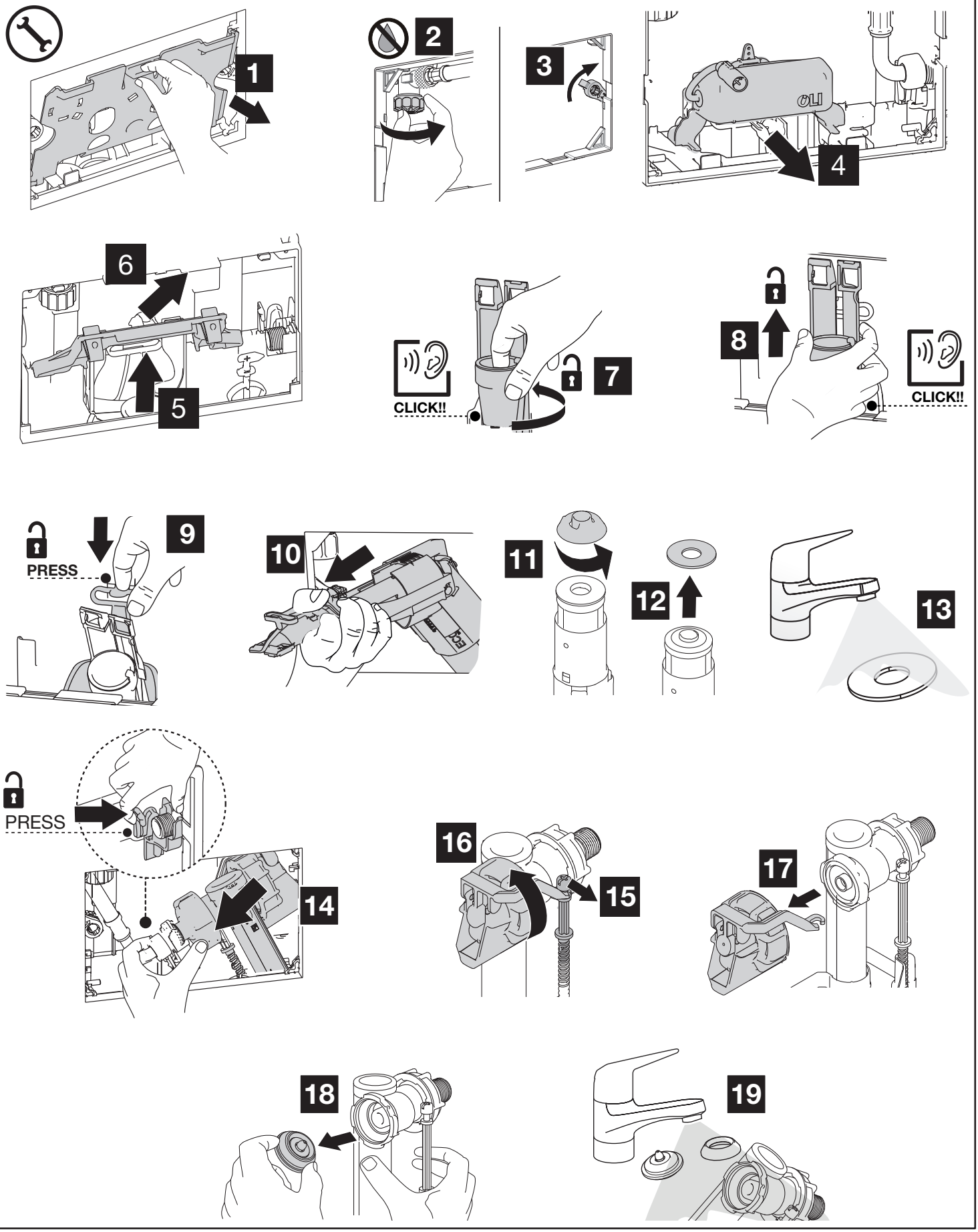
1
2
3
4
5
6
7
CLICK!!
8
CLICK!!
9
PRESS
10
11
12
13
PRESS
14
15
16
17
18
19

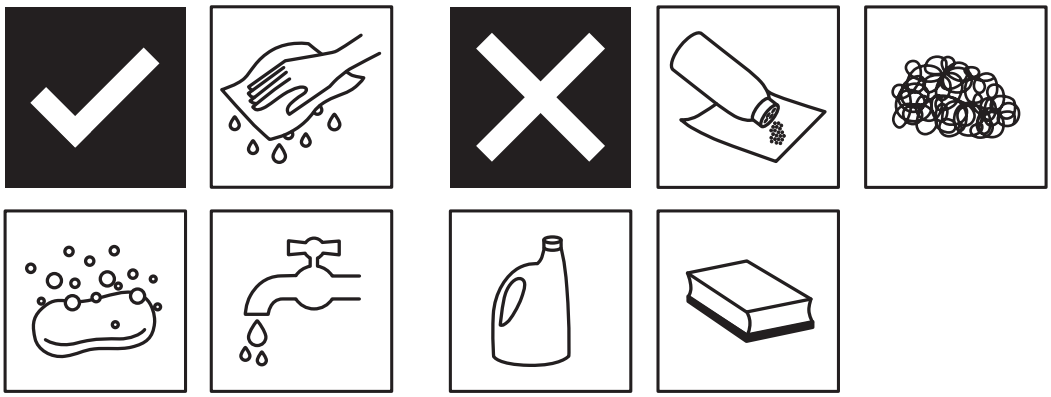

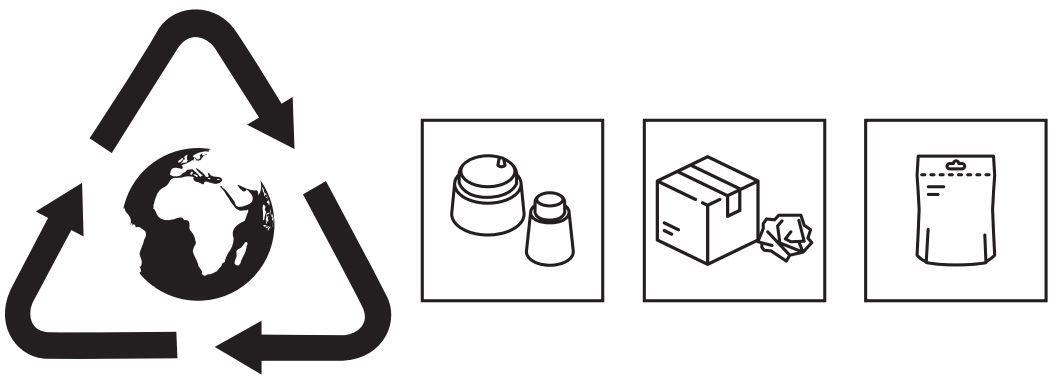

www.oli-world.com

comercial@oli-world.com | info@olisrl.it