OLI74 PLUS S90 | PNEUMATIC

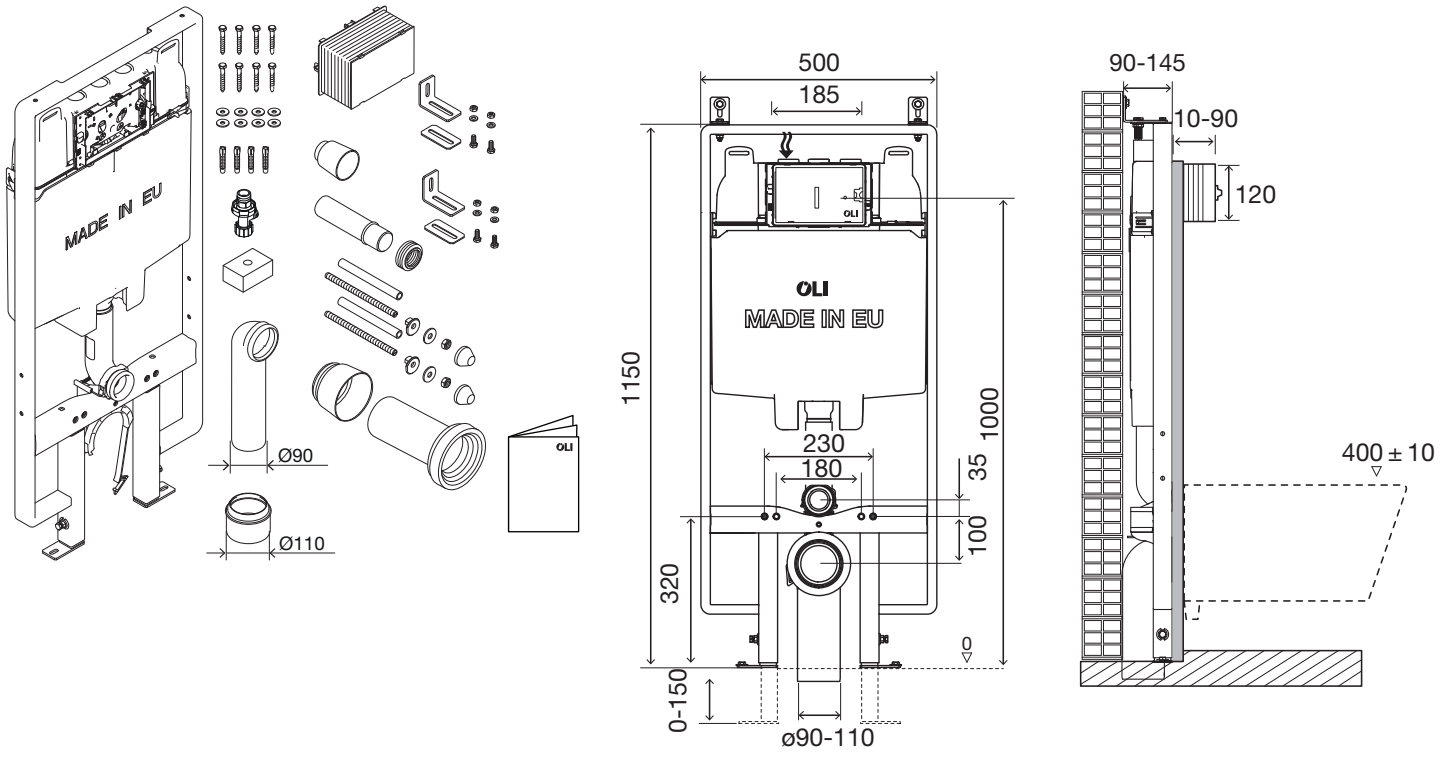

(dimensions in milimetres)

1

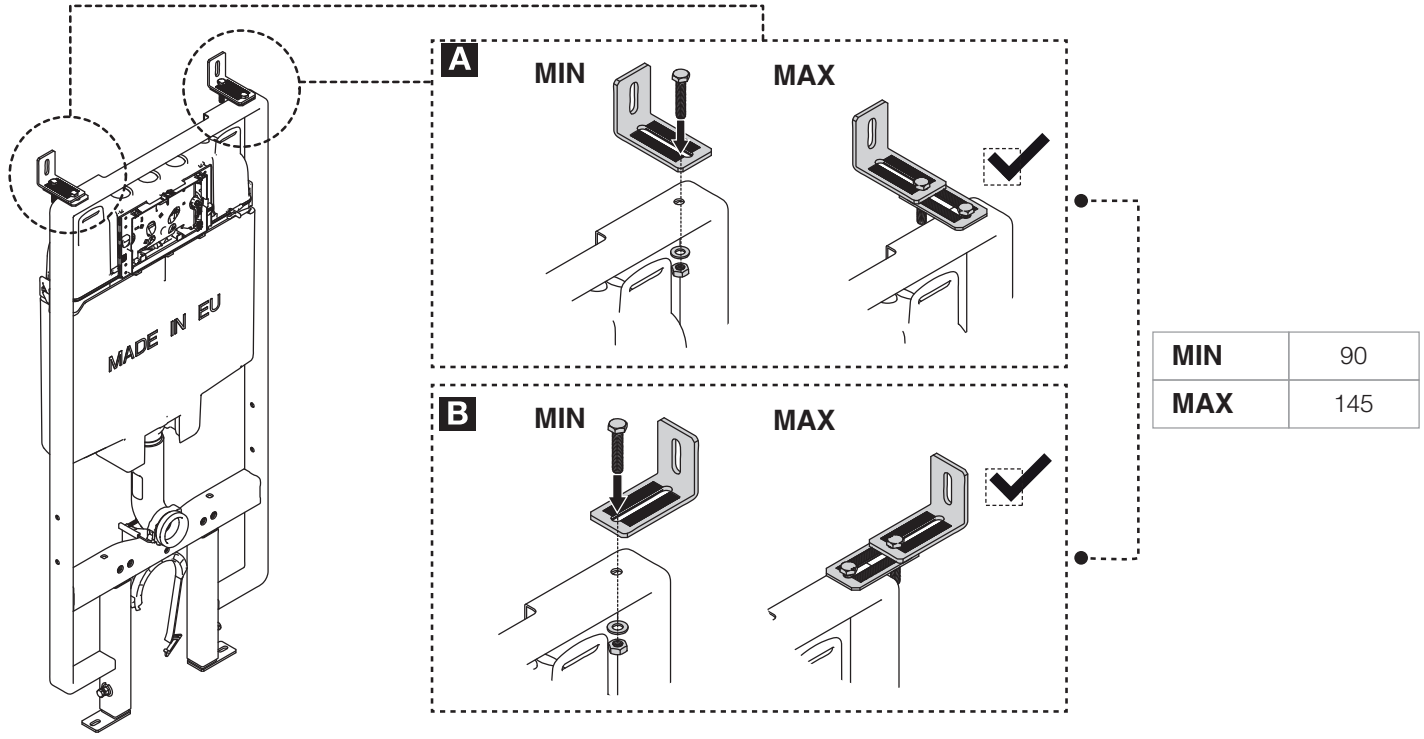

MIN	90
MAX	145

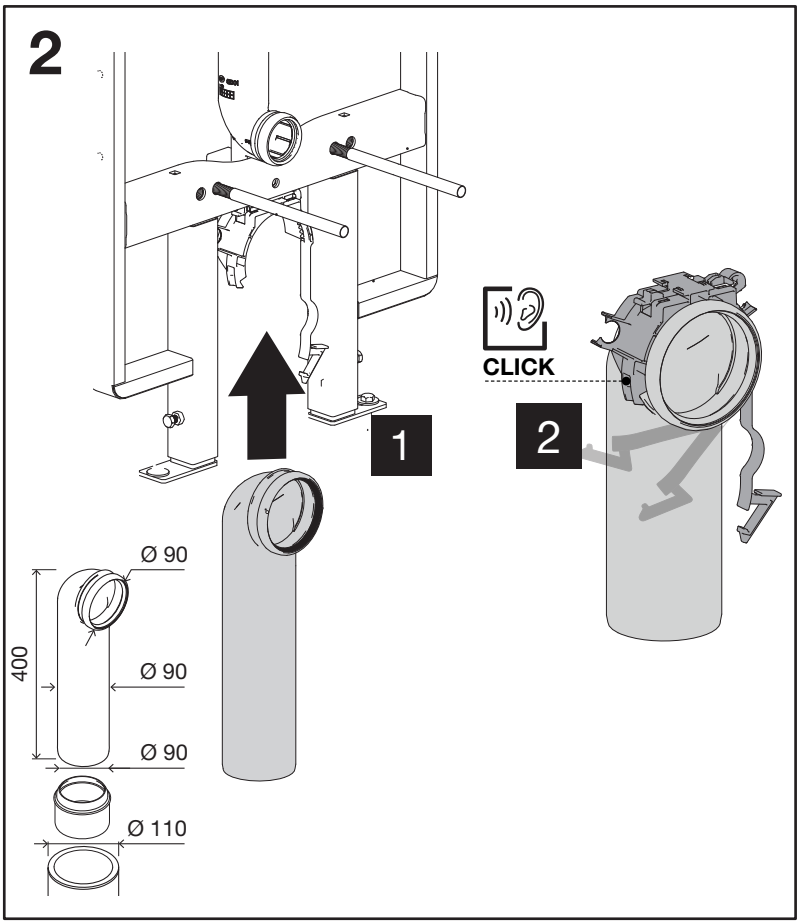
2
1
CLICK
2
Ø 90
Ø 90
Ø 90
Ø 110
400

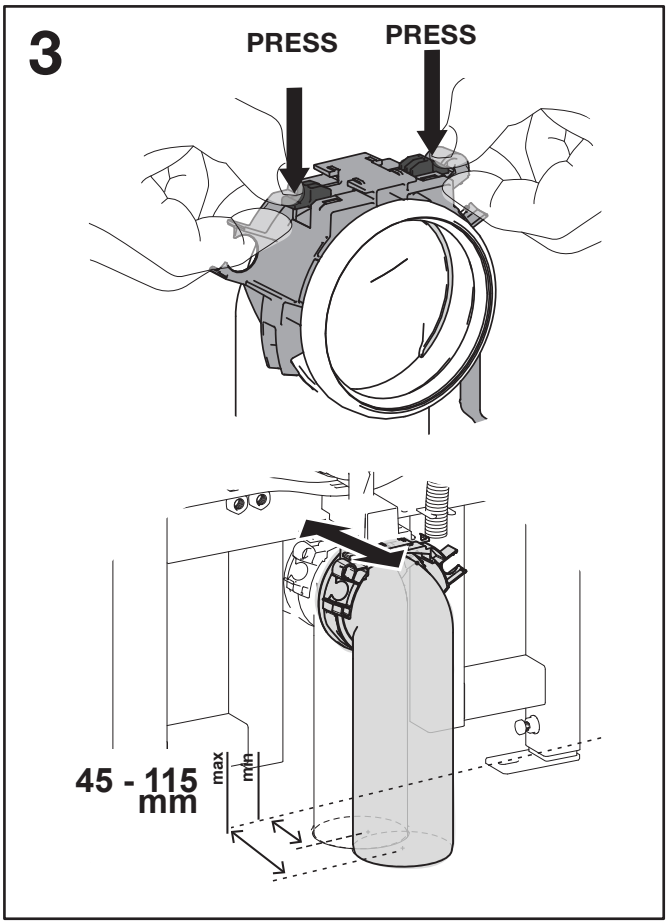
3
PRESS
PRESS
45 - 115
mm
max
min

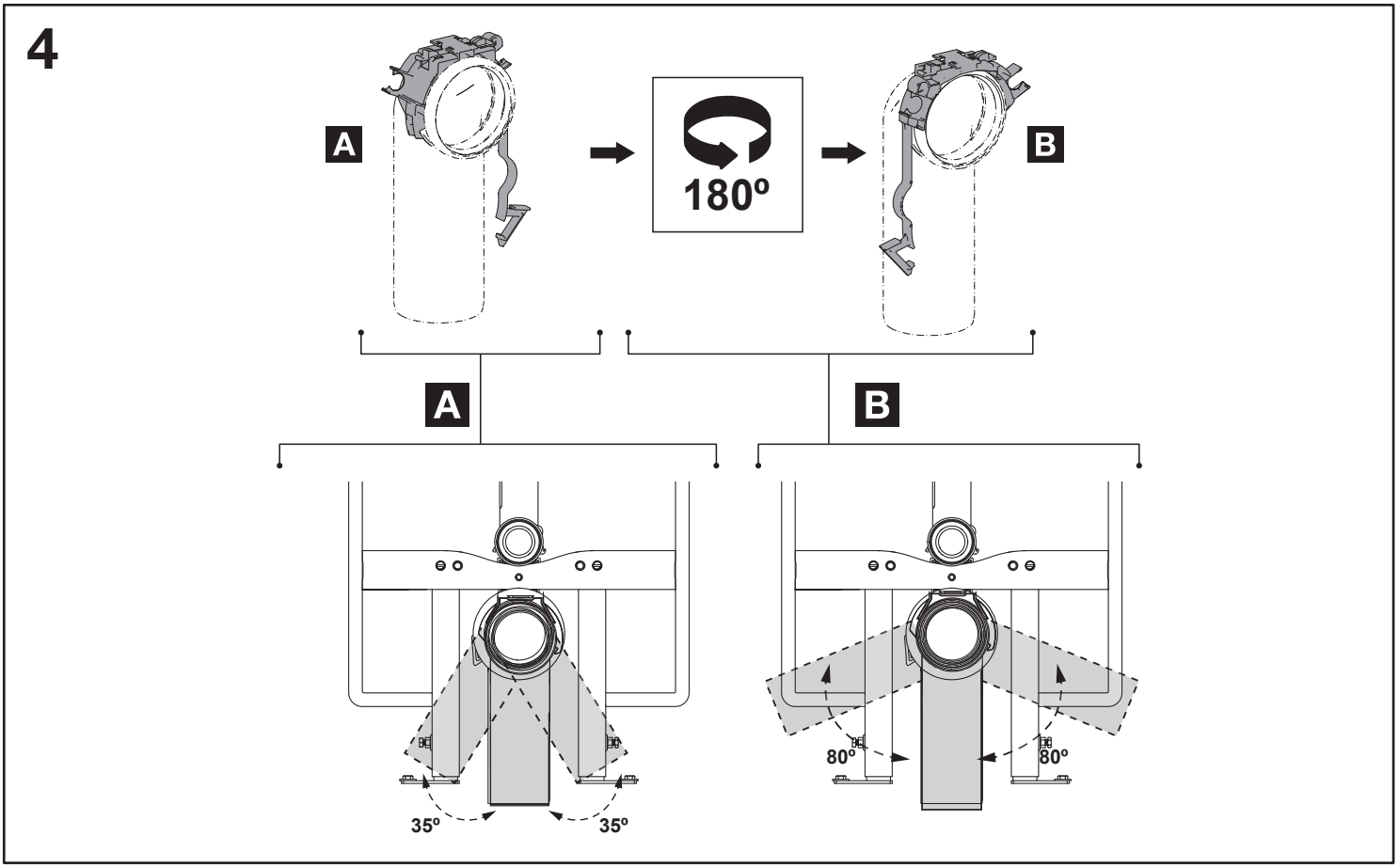
4
A
180º
B
A
B
35º
35º
80º
80º

5

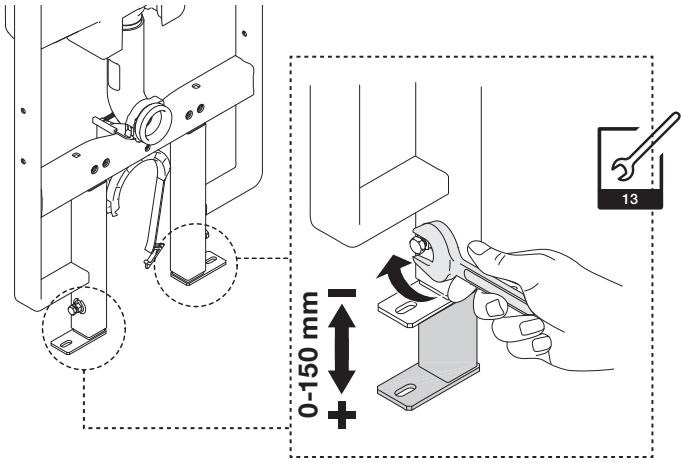

6

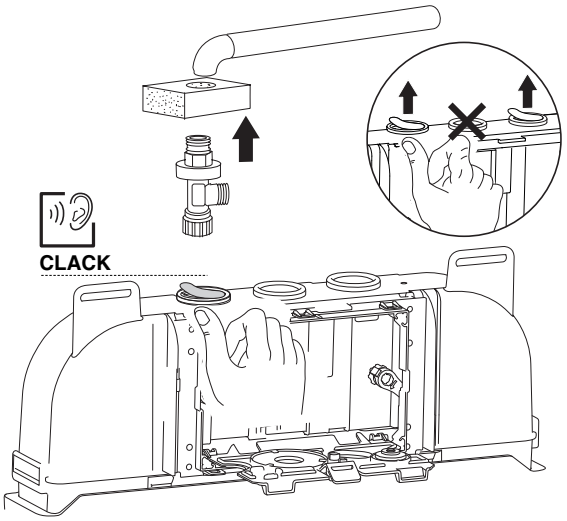

7

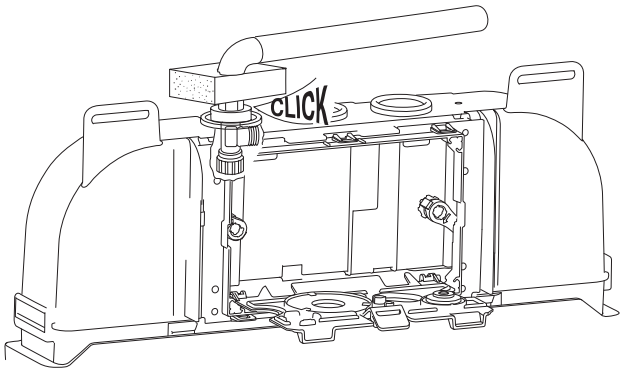

8

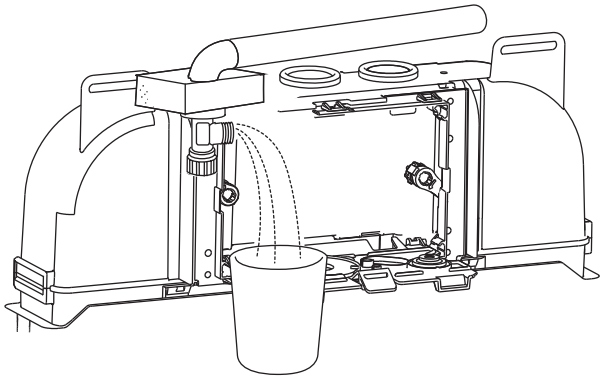

9

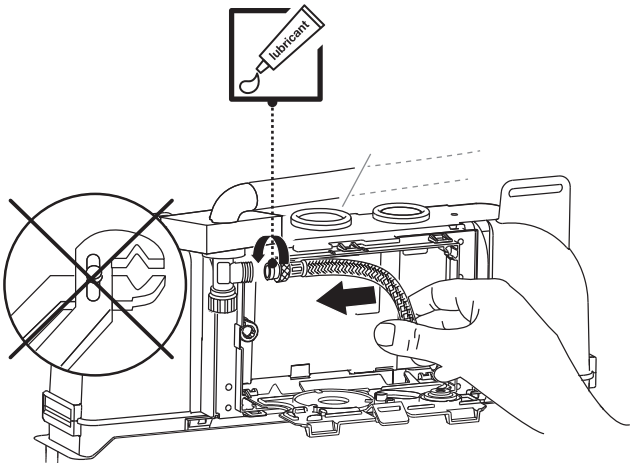

10

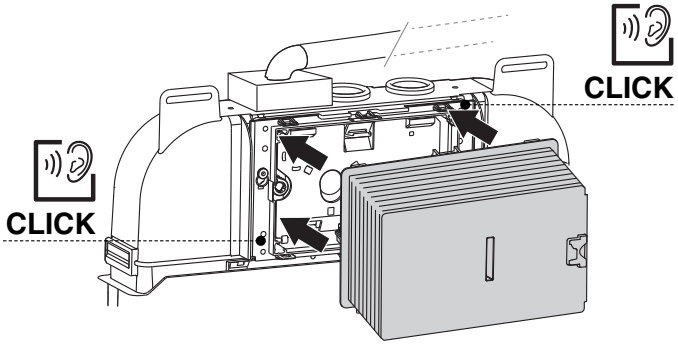

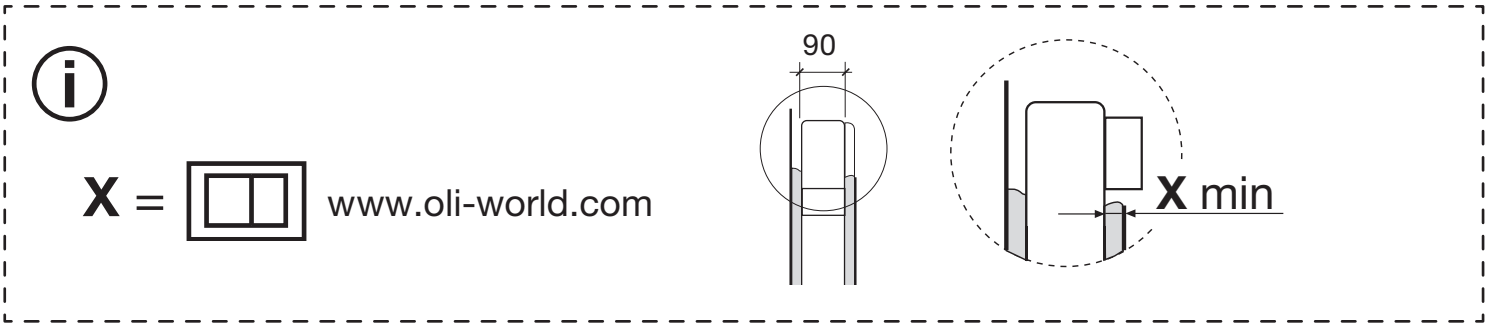
X =
www.oli-world.com
90
X min

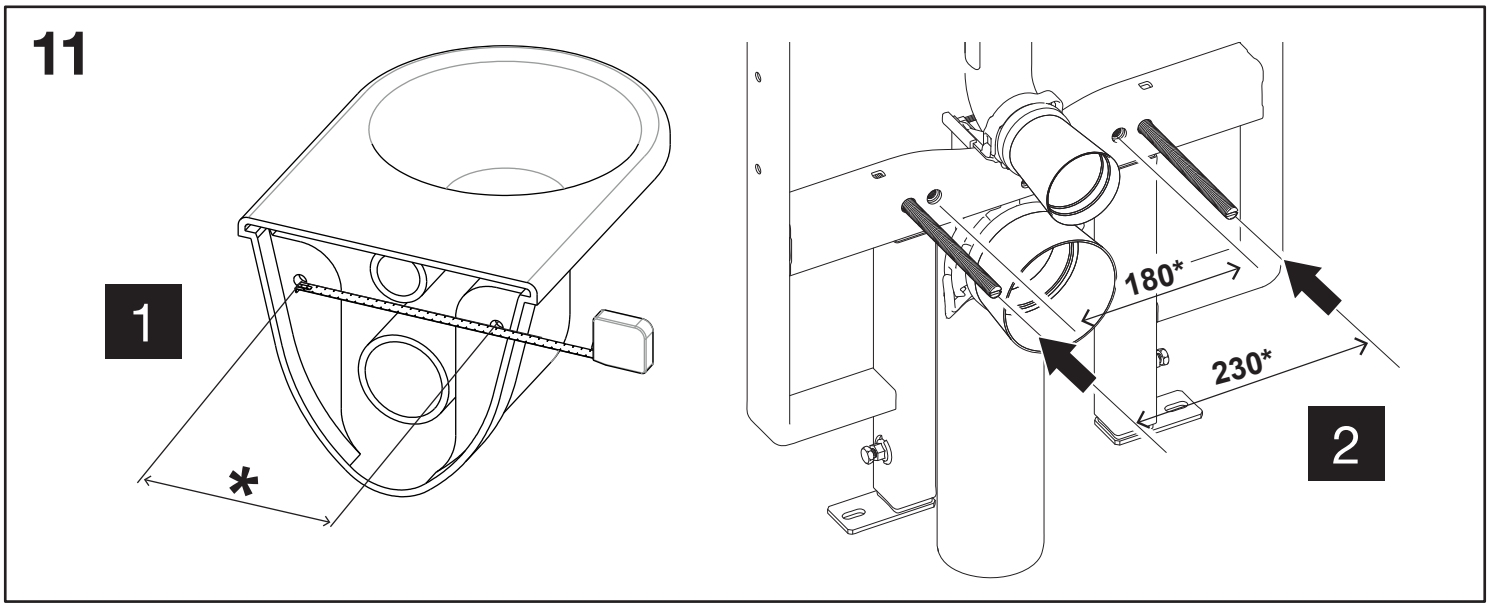
11
1
*
180*
230*
2

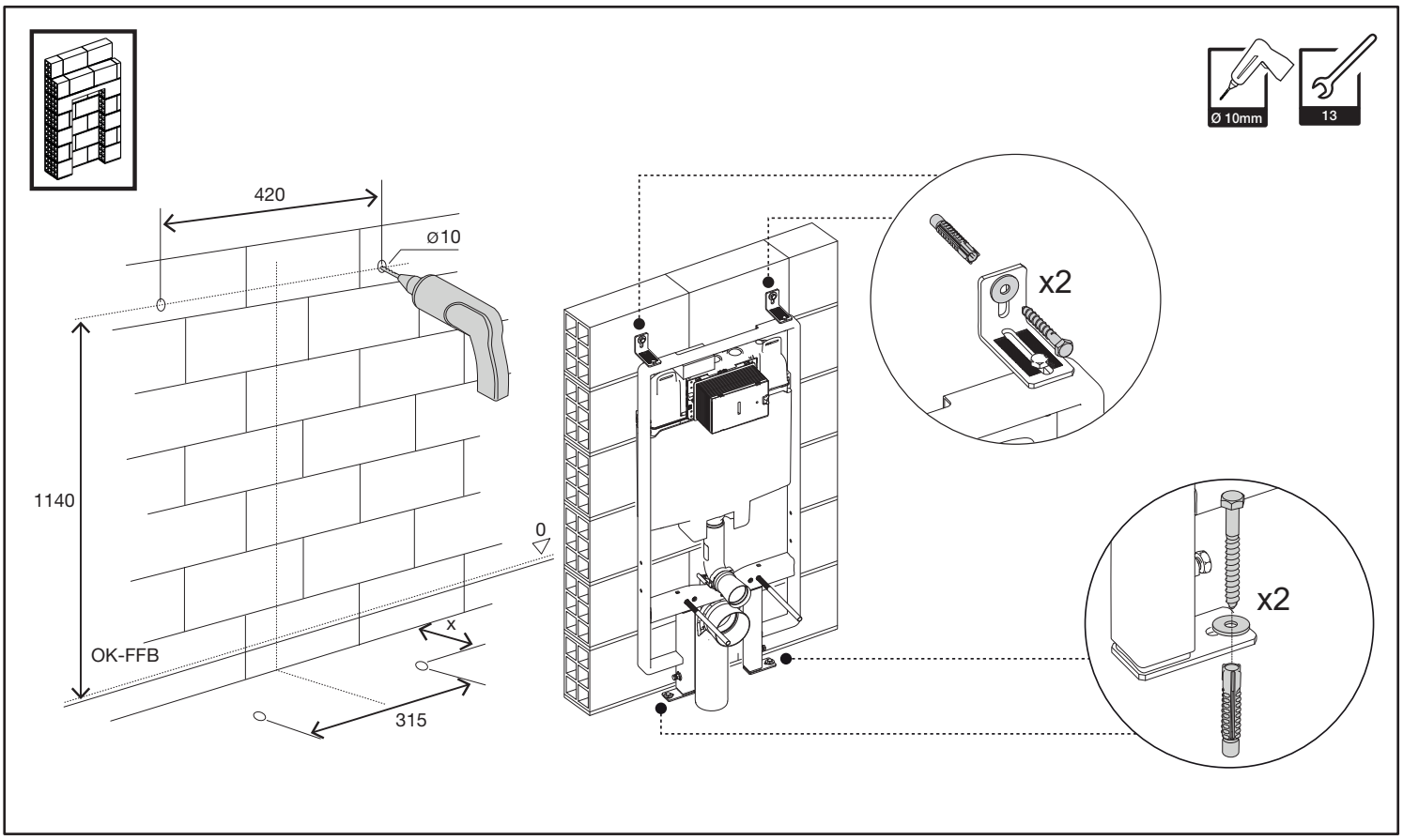
Ø 10mm
13
420
ø10
1140
0
x
OK-FFB
315
x2
x2

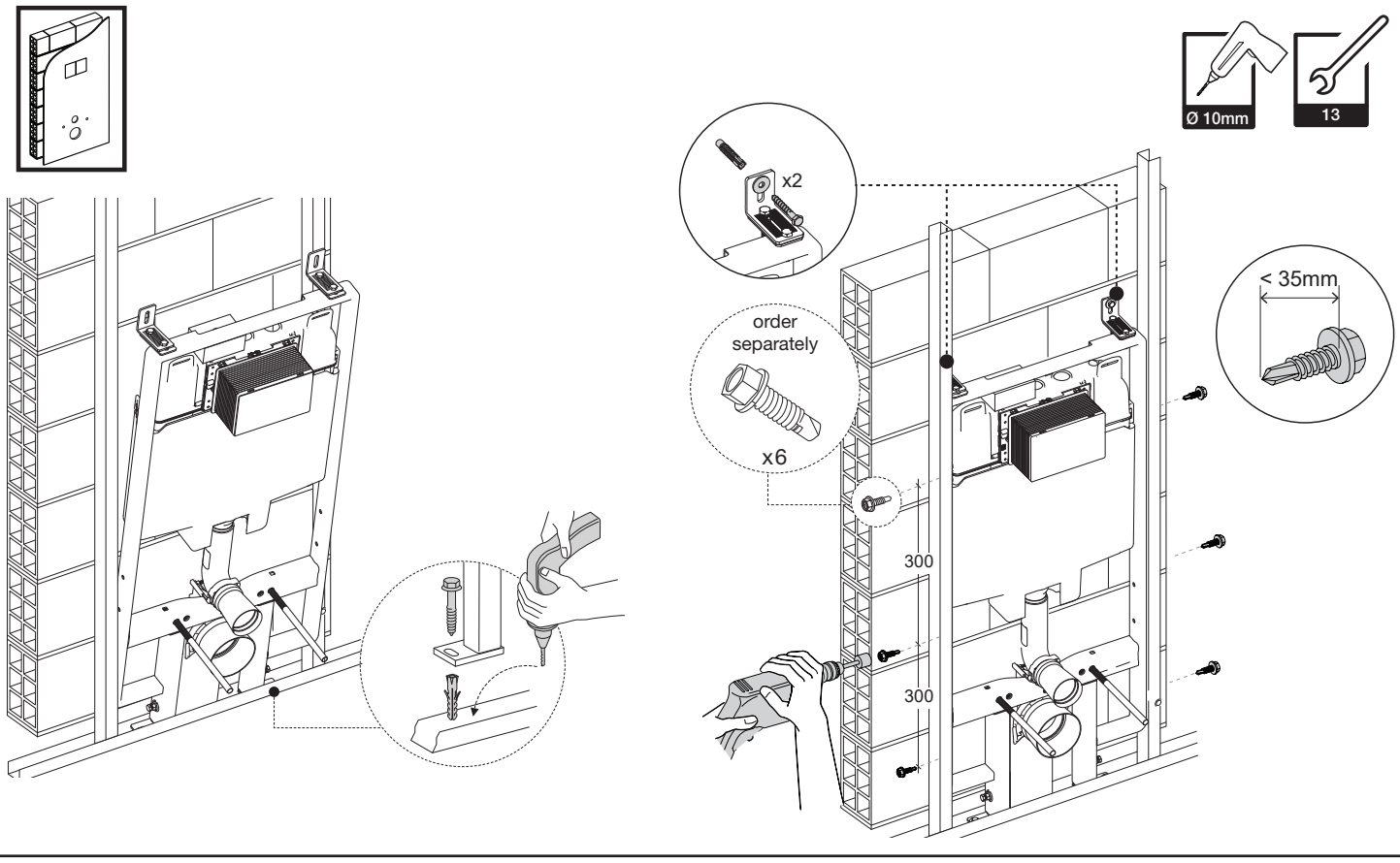
Ø 10mm
13
x2
order
separately
x6
< 35mm
300
300

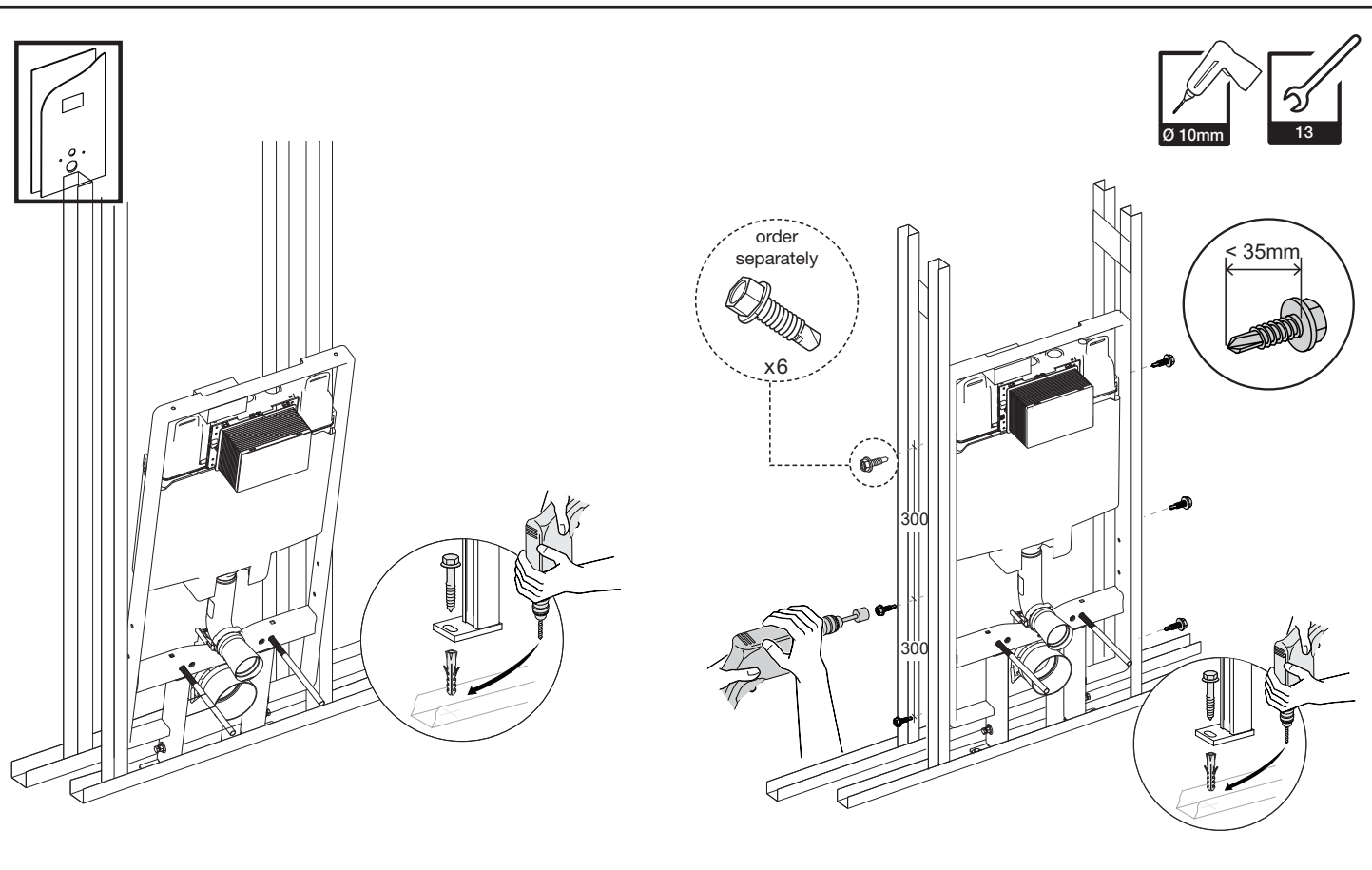
Ø 10mm
13
order
separately
x6
< 35mm
300
300

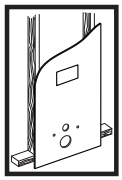

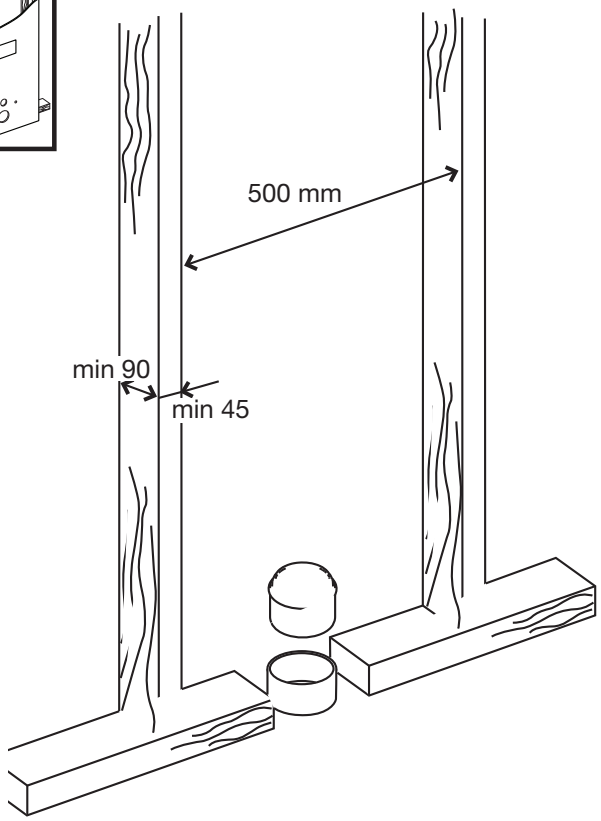
500 mm
min 90
min 45

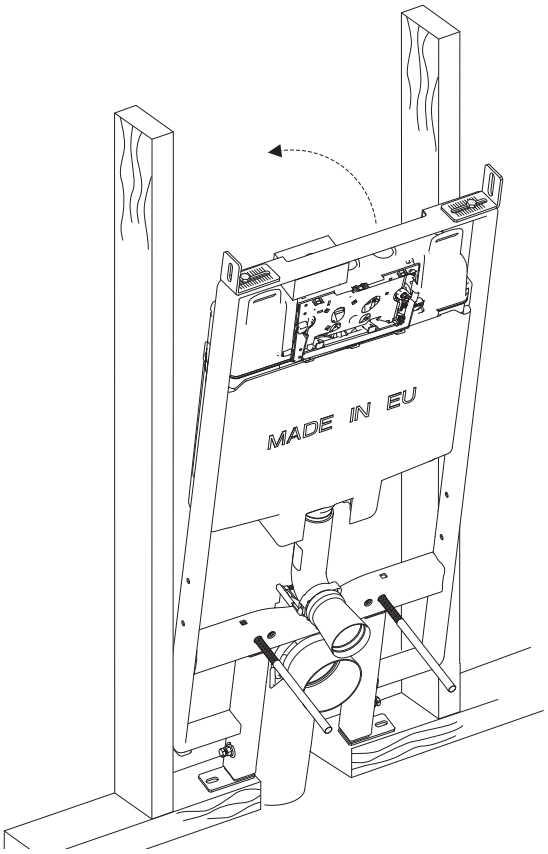
MADE IN EU

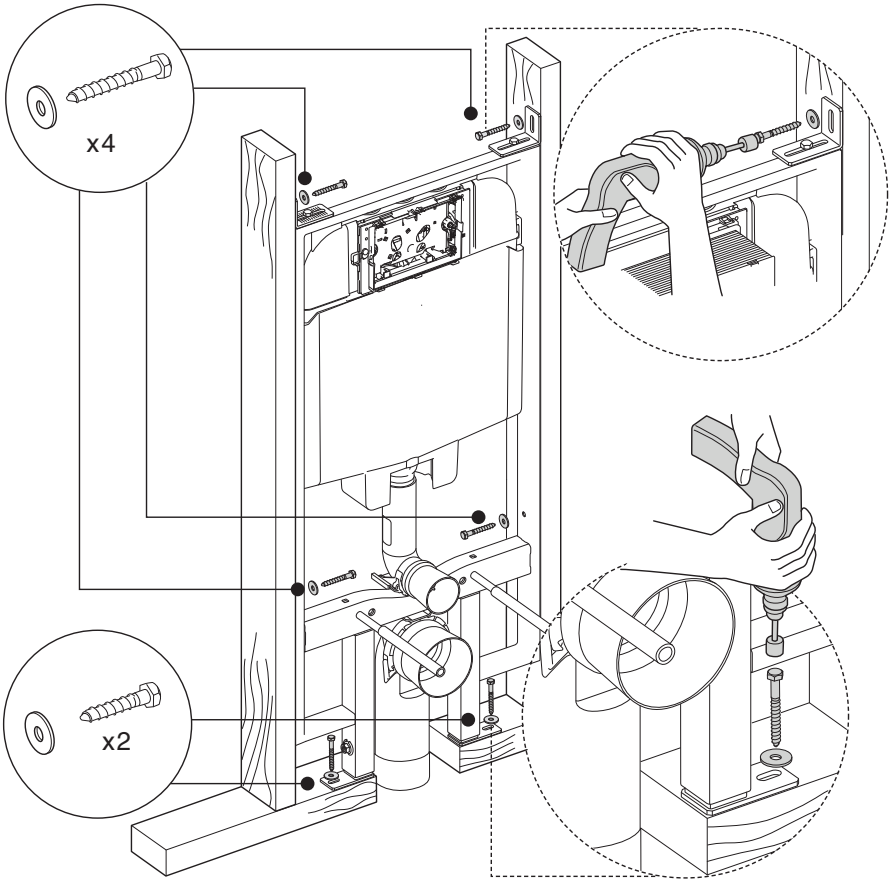
x4
x2

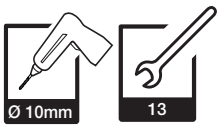
Ø 10mm
13

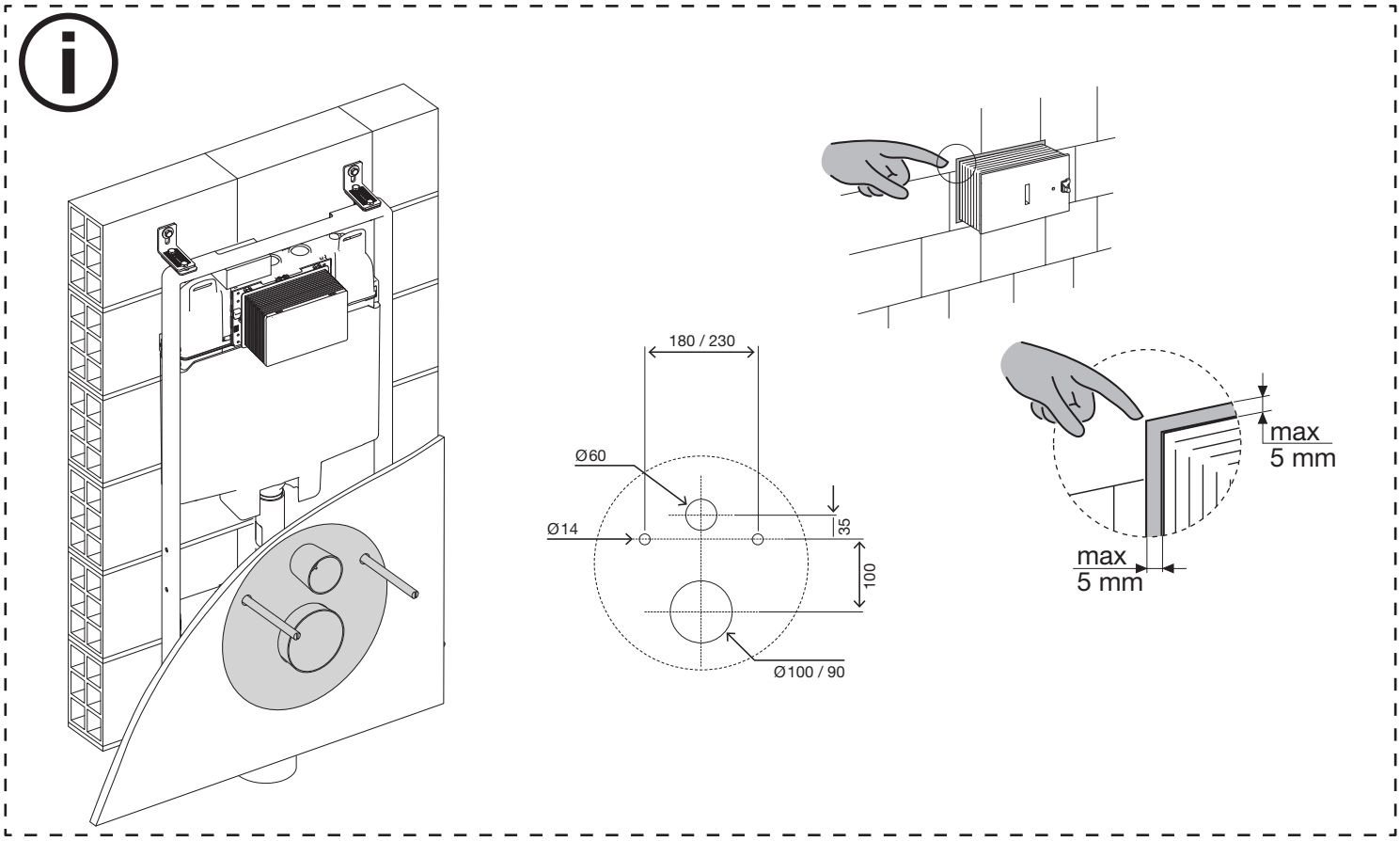
180 / 230
Ø60
Ø14
35
100
Ø100 / 90
max
5 mm
max
5 mm

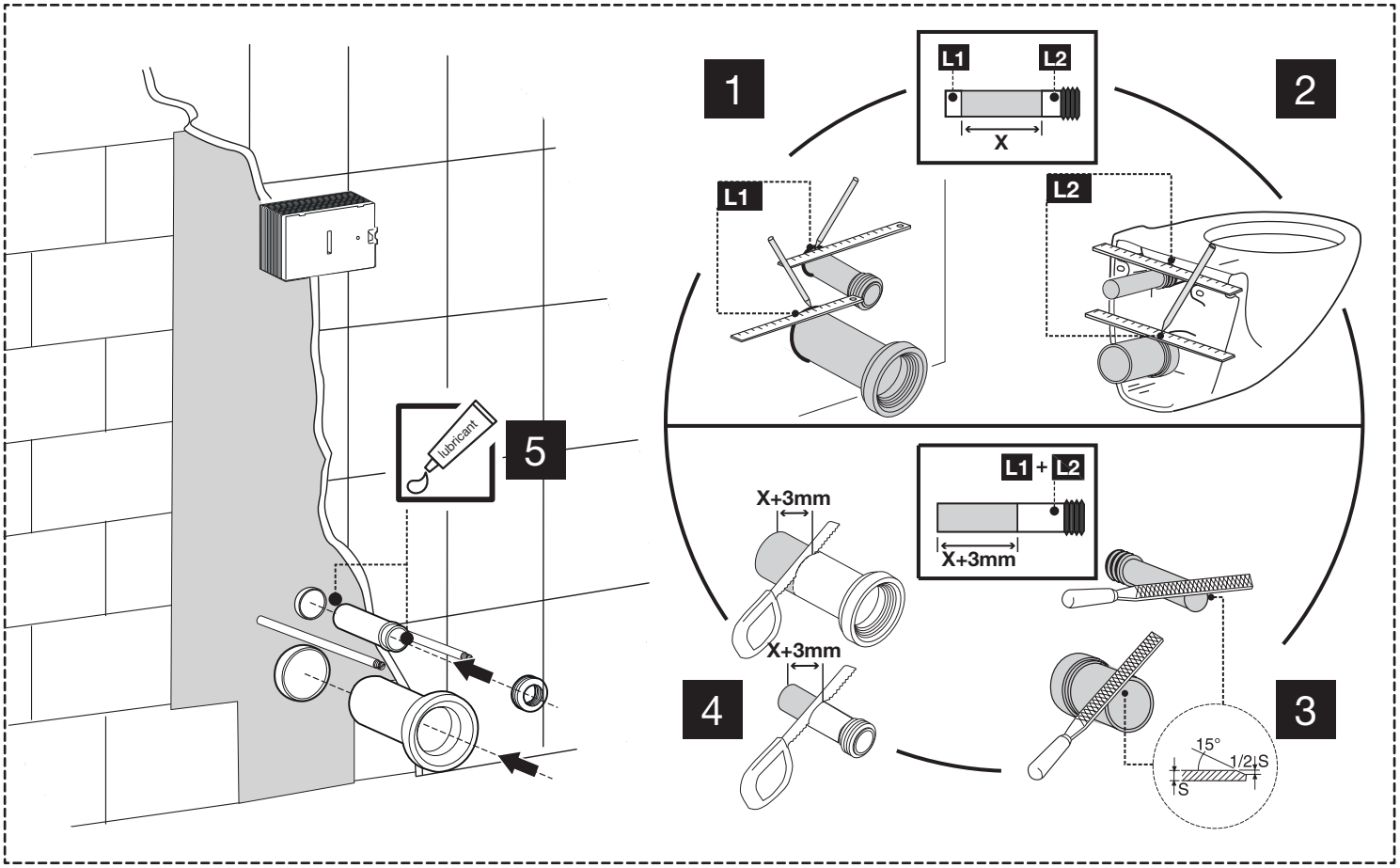
1
2
3
4
5
L1
L2
X
L1
L2
L1 + L2
X+3mm
X+3mm
X+3mm
lubricant
15°
1/2 S
S

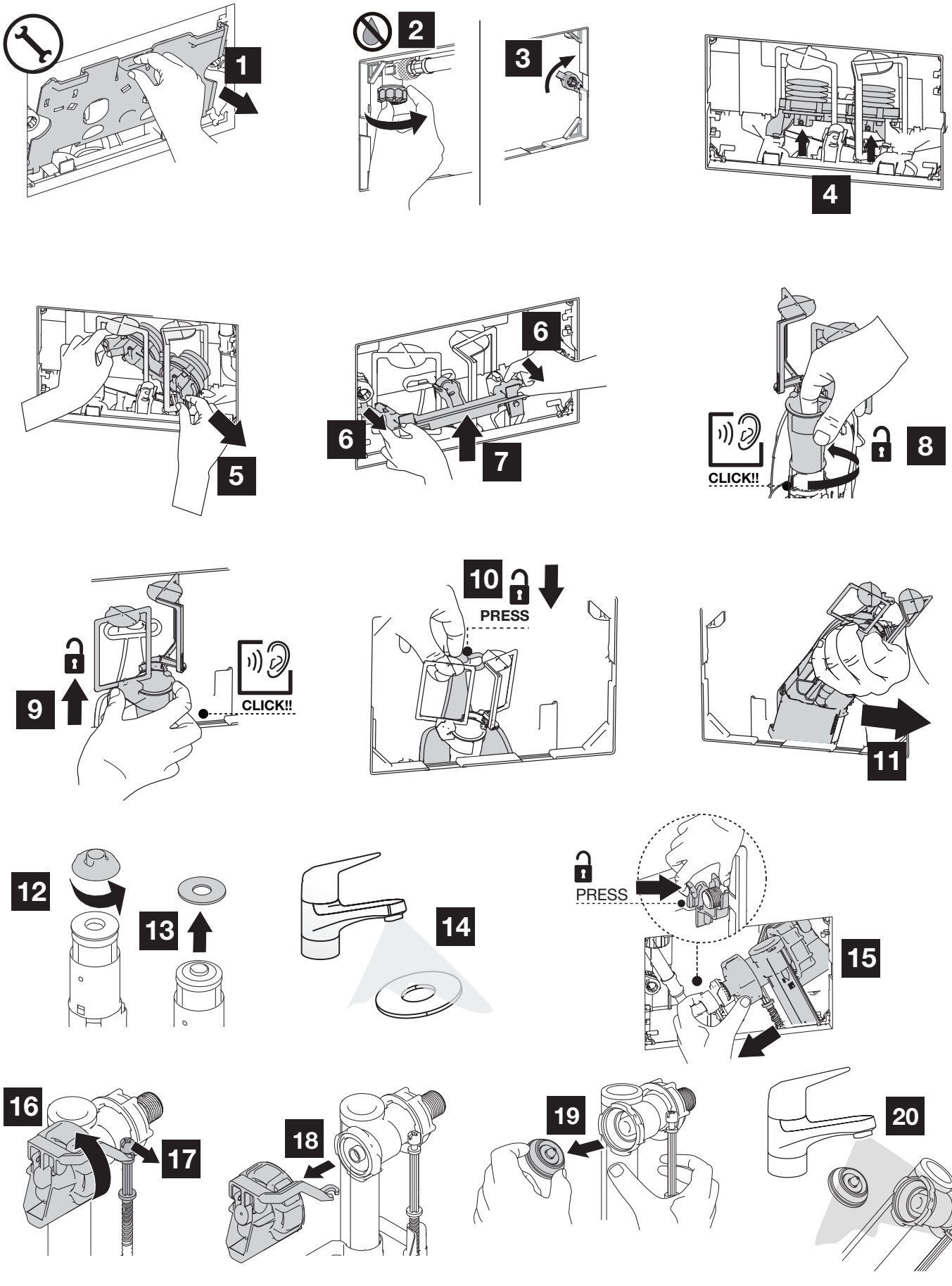

www.oli-world.com

comercial@oli-world.com | info@olisrl.it